ELEMENT 4

Installation, Operation and Owner's Manual

Bidore 95
Modore 95
Trisore 95

Product Information

Trisore 95 Video

Direct Vent Gas Fireplaces

⚠ DANGER

HOT GLASS WILL CAUSE BURNS.

DO NOT TOUCH GLASS UNTIL COOLED.

NEVER ALLOW CHILDREN TO TOUCH GLASS.

Une surface vitrée chaude peut causer des brûlures.

Laisser refroidir la surface vitrée avant d'y toucher.

Ne permettez jamais á un enfant de toucher la surface vitrée.

A barrier designed to reduce the risk of burns from the hot viewing glass is provided with this appliance and shall be installed for the protection of children and other at-risk individuals.

Une barrière conçu pour réduire le risque de brûlure par le verre de visualisation chaude est fournie avec cet appareil et doit être installé pour la protection des enfants et autres personnes à risque.

⚠ WARNING:
FIRE OR EXPLOSION HAZARD
Failure to follow safety warnings exactly could result in serious injury, death, or property damage.

- Do not store or use gasoline or other flammable vapors and liquids in the vicinity of this or any other appliance.
- WHAT TO DO IF YOU SMELL GAS
  - Do not try to light any appliance.
  - Do not touch any electrical switch; do not use any phone in your building.
  - Leave the building immediately.
  - Immediately call your gas supplier from a neighbor's phone. Follow the gas supplier's instructions.
  - If you cannot reach your gas supplier, call the fire department.
- Installation and service must be performed by a qualified installer, service agency or the gas supplier.

⚠ AVERTISSEMENT:
INCENDIE OU D'EXPLOSION
Le non-respect des avertissements de sécurité à la lettre pourrait entraîner de graves blessures , la mort ou des dommages matériels.

- Ne pas entreposer ni utilizer d'essence ni d'autres vapeurs ou liquides inflammables dans le voisinage de cet appareil ou de tout autre appareil.
- QUE FAIRE SI VOUS SENTEZ UNE ODEUR DE GAZ
  - Ne pas tenter d'allumer d'appareil.
  - Ne touchez á aucan interrupteur. Ne pas vous servir des téléphones se trouvant dans le bâtiment ou vous trouvez.
  - Quitter immédiatement le bâtiment.
  - Appelez immédiatment votre fournisseur de gaz depuis un voisin. Suivez les instructions du fournisseur.
  - Si vous ne pouvez rejoindre le fournisseur de gaz appelez le service des incindies.
- Installation et l'entretien doivent être effectués par un installateur qualifié, une agence de service ou le fournisseur de gaz.

INSTALLER: Leave this manual with the appliance.
CONSUMER: Retain this manual for future reference.

INSTALLATEUR: Laissez cette notice avec l'appareil.
CONSOMMATEUR: Conservez cette notice pour consultation ultérieure.

Intertek 4006611

September 2021

TABLE OF CONTENTS

Important Safety Information 4
Key Installation Points 7
Planning Your Gas Fireplace.. 8
User Information 10
Specifications and Dimensions 11
Bidore 95 12
Modore 95 13
Trisore 95 14
Parts of the Fireplace 15
Clearances 17
Locating the Fireplace 17
Placing the Fireplace 17
Clearances to Combustibles 18
Clearances to Non-Combustibles 18
Mantel Clearances 19
Convection Clearances 20
Gas and Electric 21
Venting 22
Configuration 22
Enclosing the Fireplace 27
Non-Combustible Materials List 27
Rough Opening Dimensions 31
Warm Air Opening 34
Cold Climate Installation 36
Access Door (Locating and Mounting) 36
Installing the Fire Media 38
Screen Installation 40
Operating the Fireplace 43
Maintenance 50
Glass 50
Burner 52
Pilot 52
Thermocouple 53
Venting 53
Replacement Parts 54
Warranty 59
Massachusetts Certification ..... Appendix One
Troubleshooting Flowchart ..... Appendix Two
Connecting To A Smart Home System ..... Appendix Three
Installing Optional Black Glass ..... Appendix Four
Error Codes.. ..... Appendix Five

IMPORTANT SAFETY INFORMATION

CAUTION - HOT! HOT! HOT!

This appliance is a HEATING appliance and it does become very hot in operation.
UNDER ANY CIRCUMSTANCES, DO NOT PLACE any object, furniture, draperies or other item LESS THAN 36" (90 cm) IN FRONT OF THE GLASS OF THE FIREPLACE.

CHILDREN AND PETS

Radiant heat can heat surfaces such as the surround and trims of the fireplace to temperatures that, although approved safe, can be quite uncomfortable to touch - particularly for children and pets. Children and pets should always be supervised when in the room where the appliance is located. Remote control handset should be kept out of reach of children. In the presence of children, we STRONGLY RECOMMEND that you install in front of the fireplace: a fire screen or, to protect young toddlers, a "hearth gate".

HOT SURFACES

Be aware that, although safe, some combustible materials and finishes, even though installed at listed clearances may, over time, discolor, warp or show cracks.
Convective heat will exit the unit and travel up the wall surface if not impeded. Protruding mantels and projections can help direct the heat away from the wall. AVOID placing heat sensitive items such as televisions, paintings, decorations, etc. above fireplaces or near the edge of protrusions unless appropriate.

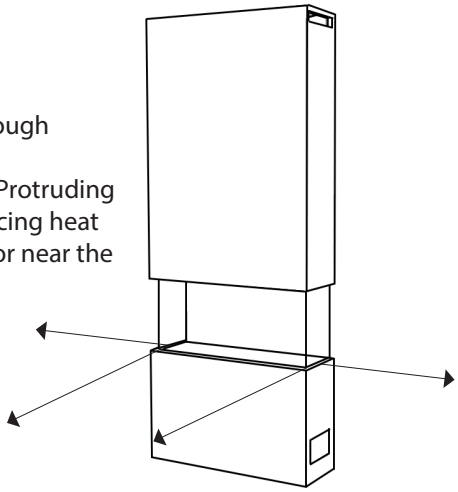

Do not place furniture or other objects within 36" of the fireplace glass.

SAVE THESE INSTRUCTIONS

Make yourself fully aware of all the following instructions and the many features of the Element4 direct vent gas fireplace appliance.

INSTALLER: Leave this manual with the appliance.

OWNER: Keep this manual for future reference.

IMPORTANT SAFETY INFORMATION

WARNING

Children and adults should be alerted to the hazards of high surface temperature and should stay away to avoid burns or clothing ignition.

WARNING

This direct vent system appliance must be installed as an OEM installation in manufactured homes (USA only) or an aftermarket permanently located, or a mobile home, **where not prohibited by local codes** and must be installed in accordance with Manufacturer's instructions and the Manufactured Home Construction and Safety Standard, Title 24 CFR, Part 3280, in the United States, or the Standard for Installation in Mobile Homes, CAN/CSA Z240 MH Series, in Canada.

If the information in these instructions is not followed exactly a fire or explosion may result causing property damage, personal injury or death.

Do not store or use gasoline or other flammable vapors and liquids in the vicinity of this appliance.

WARNING: Glass Handling

The glass must only be removed by a qualified person. Gloves should be worn when removing the glass.

WARNING: Installation and Service

Installation and service must be performed by an authorized qualified installer, service agency or gas supplier.

Any alteration to the product that causes soot or carbon to form and results in damage is not the responsibility of the manufacturer.

ONLY a qualified person may open the door/remove the glass.

Do not modify or substitute any part of this appliance.

WARNING: Electrical Grounding

These direct vent appliances must be electrically grounded in accordance with the local codes or, in the absence of local codes, with National Electric code, ANSI/ NFPA 70, or the Canadian Electric Code, CSA C22.1

WARNING: Gas Appliance

This appliance is only for use with the type of gas indicated on the rating plate. These appliances are not convertible for use with other gases unless a certified kit is used and the conversion is performed by an authorized qualified technician.

Applicable standards are ANSI Z21.50/CSA 2.22 (Vented Gas Fireplaces) and CAN/CGA 2.17-M91 (Gas-fired Appliances for Use at High Altitudes.) If your installation is at an elevation greater than 2000' in the US or 4500' in Canada, consult with the local authority having jurisdiction for gas product installations to determine their specific requirements for high altitude installations.

IMPORTANT SAFETY INFORMATION

This gas fireplace and vent assembly MUST be vented directly to the outside and MUST NEVER be attached to a chimney serving a separate solid fuel burning appliance. Each gas appliance MUST BE a separate vent system. Common vent systems are prohibited.

This unit MUST be used with a vent system as described in this installation manual. NO OTHER VENT SYSTEM OR COMPONENTS MAY BE USED.

INSPECT the external vent cap on a regular basis to make sure that no debris, plants, trees, or shrubs are interfering with the air flow.

This appliance is for indoor use only.

NEVER OBSTRUCT the flow of ventilation air. Keep the front of the appliance CLEAR of all obstacles and materials for servicing and proper operation.

The glass panels MUST be in place and sealed before the unit can be placed into safe operation.

DO NOT OPERATE this appliance with the glass panels removed, cracked or broken. Replacement of the glass panels should be performed by a licensed or qualified service person. DO NOT strike or slam the glass panels.

The glass panels SHALL ONLY be replaced by units supplied by the manufacturer. NO SUBSTITUTE panels shall be used.

DO NOT USE abrasive cleaners on the panels. DO NOT ATTEMPT to clean the glass panels when they are hot.

TURN OFF the gas before servicing the appliance. It is recommended that a qualified service technician perform an appliance check-up/service once a year.

Any safety screen or guard removed for servicing MUST BE REPLACED before operating this appliance.

THIS UNIT IS NOT FOR USE WITH SOLID FUEL, and must only be used with gas supply conditions as indicated on the rating label.

DO NOT USE this appliance if any part has been under water. Immediately call a qualified service technician to inspect the unit and to replace any part of the control system and any gas control that has been under water.

DO NOT use this appliance as a temporary source of heat during construction.

This appliance is a vented gas fireplace. It must not be used for any other purposes such as drying clothes, etc.

If the pilot flame is extinguished either intentionally or unintentionally, no attempt should be made to re-light the gas until at least 3 minutes have elapsed.

Dimensions will appear as INCHES"/metric throughout this manual. For convenience, the inches are rounded to the nearest 1/16" when converted. If greater accuracy is required, use the metric dimensions.

KEY INSTALLATION POINTS

IMPORTANT INFORMATION

This page references the most important key installation points when installing any Element 4 fireplace. This page **DOES NOT** substitute for reading the entire manual.

☐ ***RECORDS***
The installer MUST record the serial number and venting configuration to use for any technical issues that may arise.

☐ ***ELECTRICAL***
An approved 120V AC wall receptacle is required. The receiver MUST be powered by the AC adapter. Four AA batteries may be used only for on-demand electrical requirement during power outage.

☐ ***FIRE MEDIA***
When installing the fire media make sure to NEVER mix different types of media or use media purchased from another retailer. ALWAYS keep the second thermocouple AND pilot free from media.

☐ ***AIR OUTLETS***
The warm air outlets MUST be installed BEFORE the first light. The amount of square inches needed for the opening varies from model to model.

☐ ***ENCLOSING THE FIREPLACE***
ONLY a tested and approved non-combustible wallboard that is specified in the manual may be used when enclosing the fireplace.

☐ ***FRAMING***
The dimensions are different between metal and wood framing. Know which material you are using and know the framing requirements.

☐ ***VENTING***
The venting MUST follow the model specific graph shown in the manual. A restrictor may or may not need to be used based on venting run and rise.

☐ ***CONSTRUCTION DEBRIS***
REMEMBER that if the fireplace is installed before the site is finished, construction debris MUST be cleaned from the enclosure and around the unit prior to finishing and the test fire.

☐ ***GAS PRESSURES***
Gas pressures MUST be read with a manometer and confirmed with what is required in the installation manual.

☐ ***FINISHING***
A ⅛" (3 mm) gap between the flange and the enclosing wallboard MUST be maintained to prevent cracking from heat expansion and contraction.

PLANNING YOUR GAS FIREPLACE

Before You Begin

- Since the Element4 fireplaces are vented gas appliances they must be installed by a **qualified installer.** Your sales representative can help you choose the appropriate professional.

Overall Design

- One of the many features of the Element4 fireplace is its use of convective air flow.
- As the air within the enclosing walls, or chase, is warmed by the fireplace it rises and then exits the Convection Air Outlet(s). The warm air in the chase is then replaced by room air which enters through the Room Air Inlets. As this warm air cools it falls toward the floor where it's drawn into the inlet and the cycle repeats.
- The Room Air Inlets are part of the fireplace and cannot be blocked or adjusted. The amount of square area required for your Convection Air Outlet(s) is determined by the fireplace model and is listed in the installation manual.
- As seen in the illustrations, below, the outlets may be placed in a number of locations to accommodate all types of designs. In all cases, though, your design must allow the free flow of air through the chase.

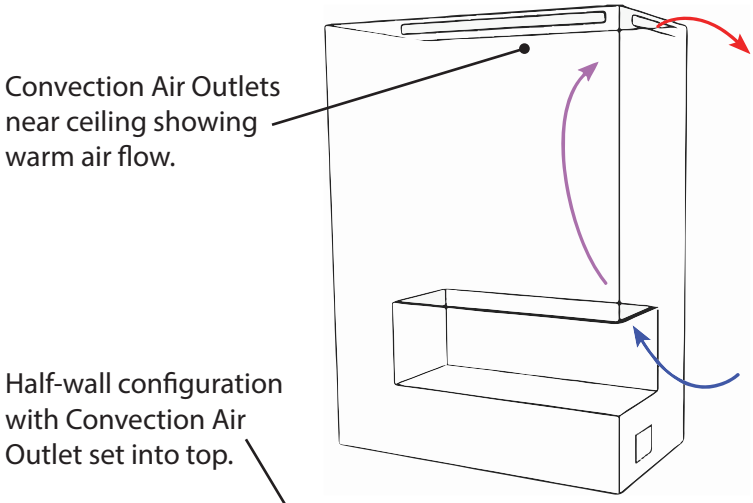

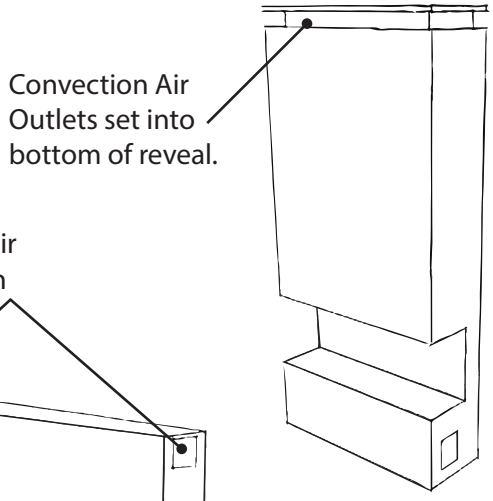

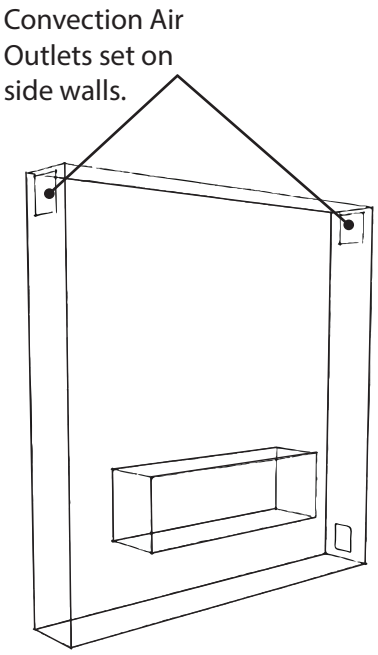

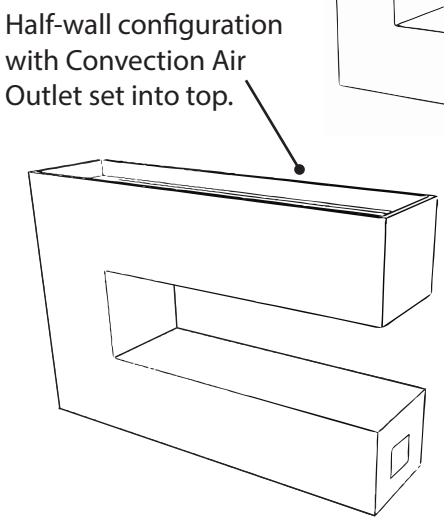

PLANNING YOUR GAS FIREPLACE

Important Points

- The most important question to ask when locating your fireplace is, "Can it be effectively vented?" The Element4 fireplaces are approved as "direct vent" appliances. This means that all of the air for combustion comes directly from the outside and all of the flue gases are discharged directly to the outside by way of co-axial 5" x 8" direct vent pipe.
- The venting can run vertically, horizontally or a combination of both. For example, it can be installed near and vented through an exterior wall. Or it can be installed near the center of your home and vented through the roof. In any case, the installation manual details the allowable configurations, distances and clearances. If the venting falls outside of the vent graphs, a power vent is available.
- The next question to ask is, "Can I get my gas pipe to the fireplace?" The Element4 fireplaces burn either natural gas (NG) or propane gas (LP.) Your sales representative will ask you for your requirement at the time of order and your gas professional (usually your plumber) can advise you on the most effective route for the gas supply within your home.
- In order to keep the look as contemporary as possible the fireplace controls are mounted away from the fireplace but within a radius of approximately 50" (1250 mm) from center of the fireplace (on most models). These controls must be behind an access door (not included) with a suggested size of 12" square to allow ample room to work on the fireplace controls.
- This sheet is not intended to replace the Element4 Installation Manual. In all cases, the information and instructions in the Element4 Installation Manual must be followed. The Element4 Installation Manual is included with your fireplace and is available at www.europeanhome.com Please call us if you have any questions or are uncertain about any aspect of your installation!

Let Us Help

- European Home and its retail partners are here to assist you with your unique fireplace design. Let us help you today!

Contact your local dealer if you have any Questions

USER INFORMATION

WARMTH AND BEAUTY - HOW IT WORKS

The Element4 fireplaces are direct vent fireplaces and, as such, the intake and exhaust are both handled through the vent pipe. The fireplace also provides convection air to your room. The illustration shows one of the unique features of the Element4 fireplaces - its use of warm, convection air flow.

Other fireplaces have louvered metal boxes around them to keep temperatures under control. The Element4 fireplaces use your enclosing walls, or chase, to guide this warm air.

When the air within the chase is warmed by the fireplace, it exits through an *air outlet* that you have provided. This chase air is then replaced by room air which enters through the *Air Inlet* (provided by the fireplace design) and through the access door (not included). As the exiting warm air cools, it falls to the floor where it's drawn into the inlets and the cycle repeats.

The fireplace provides the *inlet* for room air as part of its design; you provide the warm air *outlet* as part of your design.

See the **ENCLOSING the FIREPLACE** section of this manual for more information.

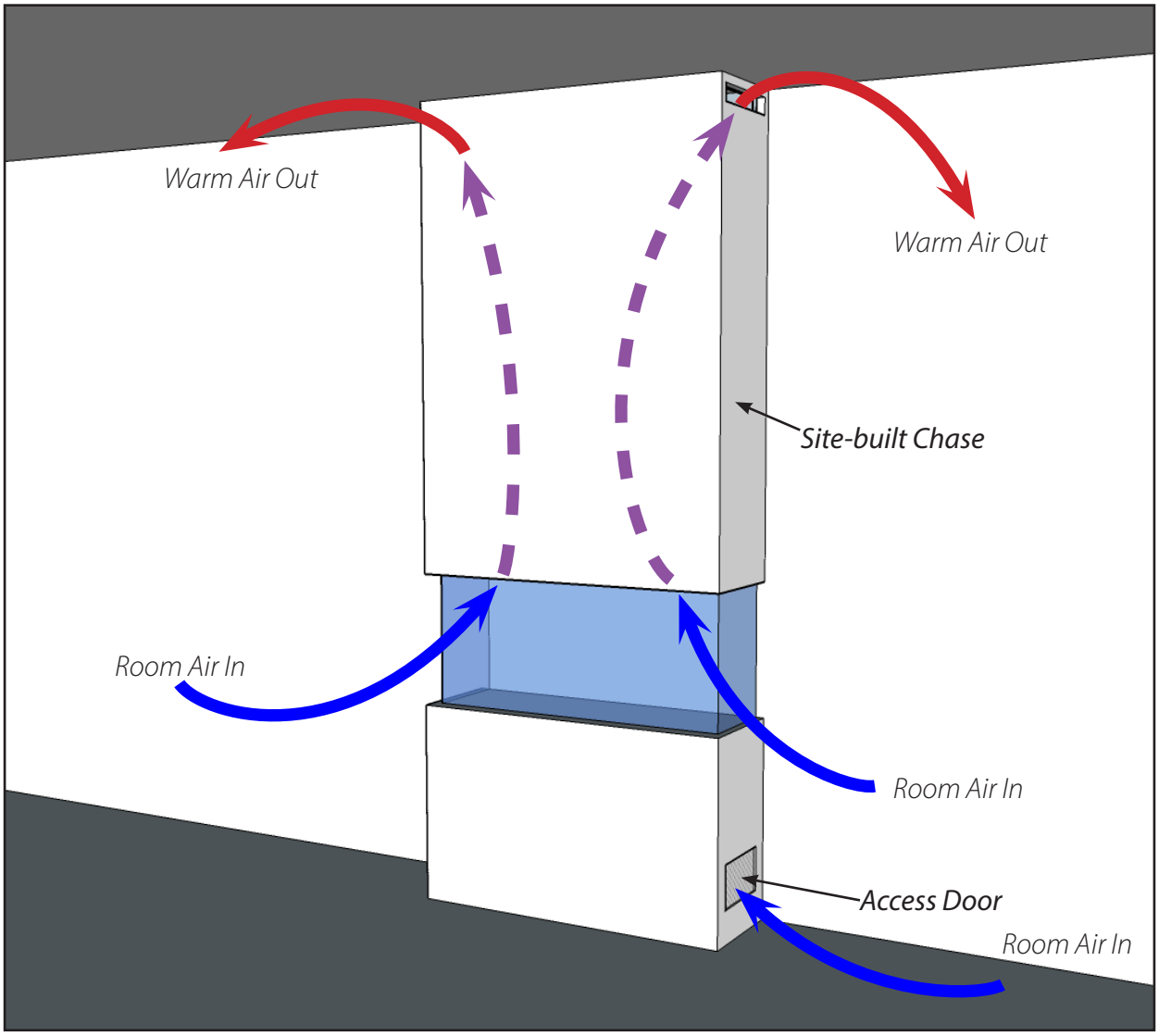

Figure 1

SPECIFICATIONS and DIMENSIONS

APPLIANCE RATINGS

Model		Modore 95 MKII Bidore 95 MKII Trisore 95 MKII	
Gas		Natural Gas	Propane
Input Maximum	Btu/hr	36,200	32,400
Input Minimum	Btu/hr	17,050	13,650
Inlet Pressure	in. w.c.	10	12
	kpa	2.49	2.99
Manifold Pressure	in. w.c.	6.2	10.9
	kpa	1.54	2.71
Main Burner Injector Marking		1200	380
Pilot Injector Marking		32.2	27.1
New Efficiency		83%	

Figure 2

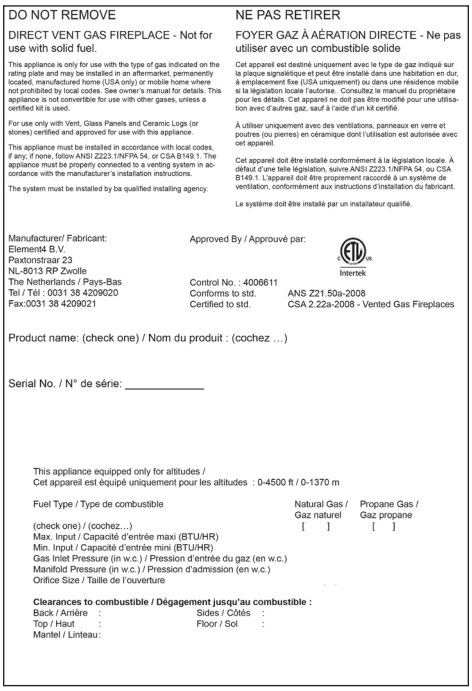

DO NOT REMOVE

DIRECT VENT GAS FIREPLACE - Not for use with solid fuel.

This appliance is only for use with the type of gas indicated on the rating plate and may be installed in an aftermarket, permanently located, manufactured home (USA only) or mobile home where not prohibited by local codes. See owner's manual for details. This appliance is not convertible for use with other gases, unless a certified kit is used.

For use only with Vent, Glass Panels and Ceramic Logs (or stones) certified and approved for use with this appliance.

This appliance must be installed in accordance with local codes, if any; if none, follow ANSI Z223.1/NFPA 54, or CSA B149.1. The appliance must be properly connected to a venting system in accordance with the manufacturer's installation instructions.

The system must be installed by ba qualified installing agency.

NE PAS RETIRER

FOYER GAZ À AÉRATION DIRECTE - Ne pas utiliser avec un combustible solide

Cet appareil est destiné uniquement avec le type de gaz indiqué sur la plaque signalétique et peut être installé dans une habitation en dur, à emplacement fixe (USA uniquement) ou dans une résidence mobile si la législation locale l'autorise. Consultez le manuel du propriétaire pour les détails. Cet appareil ne doit pas être modifié pour une utilisation avec d'autres gaz, sauf à l'aide d'un kit certifié.

À utiliser uniquement avec des ventilations, panneaux en verre et poutres (ou pierres) en céramique dont l'utilisation est autorisée avec cet appareil.

Cet appareil doit être installé conformément à la législation locale. À défaut d'une telle législation, suivre ANSI Z223.1/NFPA 54, ou CSA B149.1. L'appareil doit être proprement raccordé à un système de ventilation, conformément aux instructions d'installation du fabricant.

Le système doit être installé par un installateur qualifié.

Manufacturer/ Fabricant:
Element4 B.V.
Paxtonstraar 23
NL-8013 RP Zwolle
The Netherlands / Pays-Bas
Tel / Tél : 0031 38 4209020
Fax:0031 38 4209021

Approved By / Approuvé par:
Intertek
Control No. : 4006611
Conforms to std. ANS Z21.50a-2008
Certified to std. CSA 2.22a-2008 - Vented Gas Fireplaces

Product name: (check one) / Nom du produit : (cochez ...)

Serial No. / N° de série: _____

This appliance equipped only for altitudes /
Cet appareil est équipé uniquement pour les altitudes : 0-4500 ft / 0-1370 m

Fuel Type / Type de combustible	Natural Gas / Gaz naturel	Propane Gas / Gaz propane
(check one) / (cochez...)	[ ]	[ ]
Max. Input / Capacité d'entrée maxi (BTU/HR)		
Min. Input / Capacité d'entrée mini (BTU/HR)		
Gas Inlet Pressure (in w.c.) / Pression d'entrée du gaz (en w.c.)		
Manifold Pressure (in w.c.) / Pression d'admission (en w.c.)		
Orifice Size / Taille de l'ouverture		

Clearances to combustible / Dégagement jusqu'au combustible :
Back / Arrière :
Top / Haut :
Mantel / Linteau:
Sides / Côtés :
Floor / Sol :

Figure 3

This product was tested and listed to ANSI Z21.11.50a-2008 and CSA2.22a-2008 "Vented Gas Fireplaces" by Intertek Group. (Figure 3)

A sample listing label image is shown above. A *metal* listing label is attached to every Element4 fireplace and contains important certification information. **The listing label must not be removed from the fireplace.**

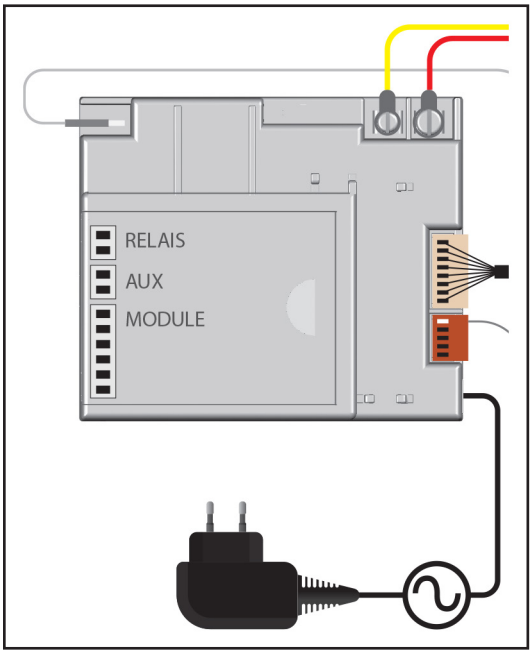

Figure 4: AC Adapter Connection

AC ADAPTER SPECIFICATIONS	
Input Voltage	120V AC
Input Power	9 W
Output Voltage	6V DC
Output Current	500 mA
Size	3.1"H x 2"W x 1.7"D
Output Cord Length	6 Feet
Agency Approvals	UL, CSA

Figure 5

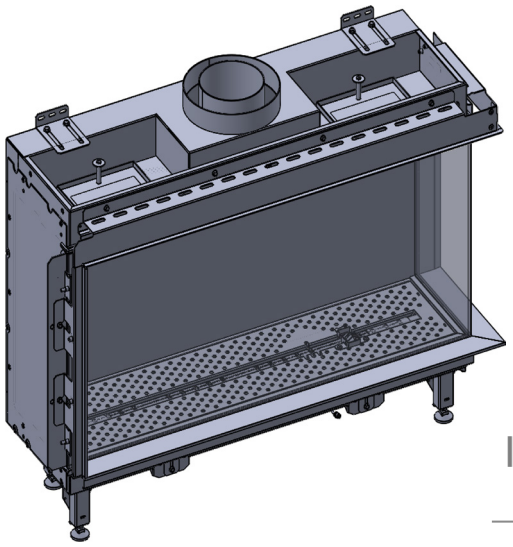

Bidore 95 RC shown
(Bidore 95 LC is a mirror image)

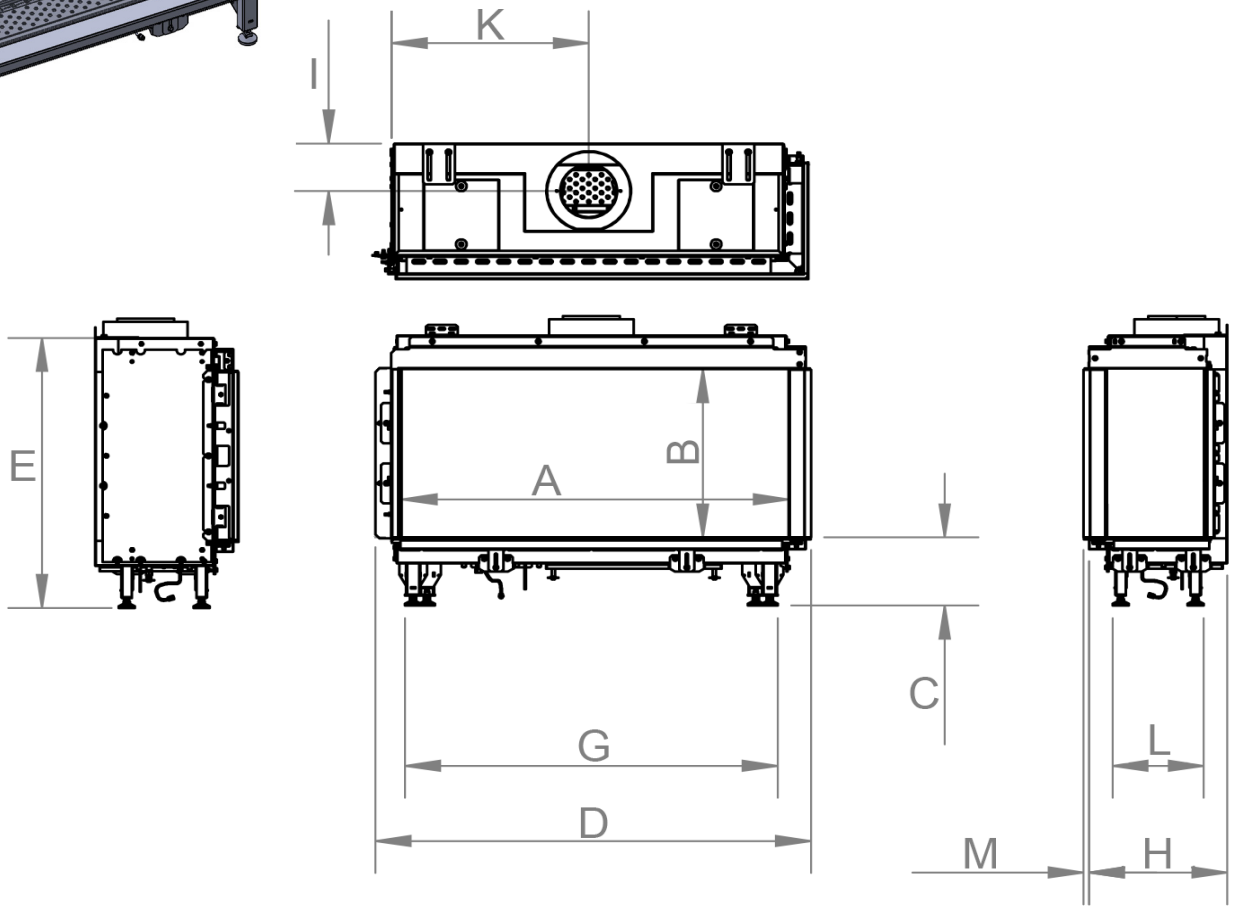

LETTER	A	B	C	D	E	G	H	I
INCHES [MILLIMETER]	$35\frac{15}{16}$" [912]	$16\frac{9}{16}$" [420]	$6\frac{11}{16}$" [170]	$40\frac{7}{16}$" [1027]	$26\frac{9}{16}$" [674]	$34\frac{9}{16}$" [878]	$12\frac{13}{16}$" [326]	$4\frac{11}{16}$" [119]

LETTER	K	L	M
INCHES [MILLIMETER]	$18\frac{1}{4}$" [464]	$8\frac{7}{16}$" [215]	$\frac{1}{2}$" [13]

Figure 6

A downloadable DWG file is available at www.europeanhome.com for dimensions not shown.

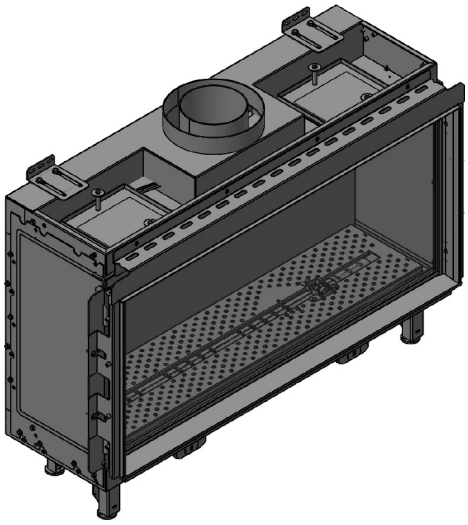

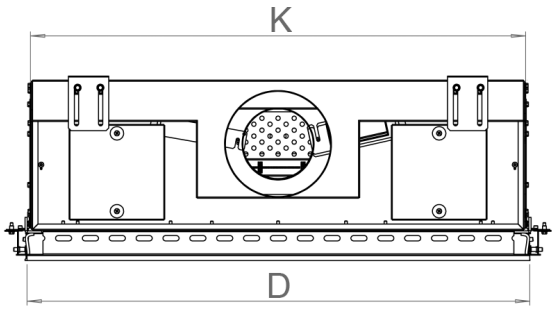

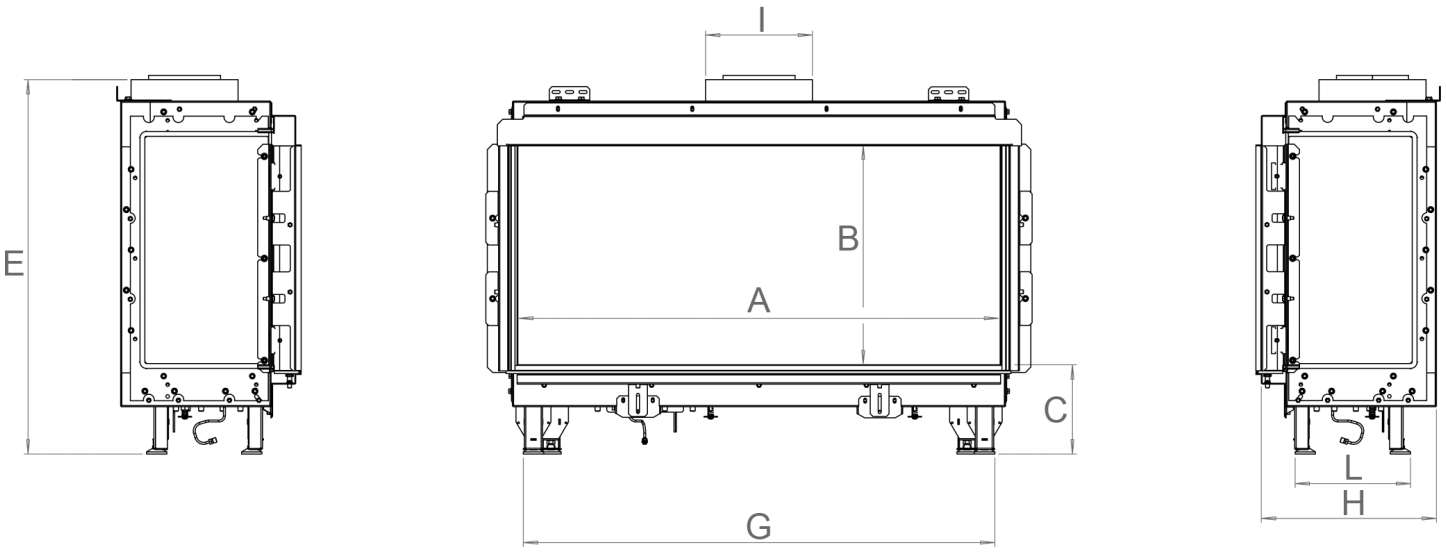

LETTER	A	B	C	D	E	G	H	I	K	L
INCHES [MILLIMETERS]	36 5/16 [922]	16 13/16 [427]	6 9/16 [166]	36 7/8 [936]	27 7/16 [697]	34 9/16 [878]	12 13/16 [325]	7 3/16 [198]	36 5/16 [322]	8 7/16 [214]

Figure 7

A downloadable DWG file is available at www.europeanhome.com for dimensions not shown.

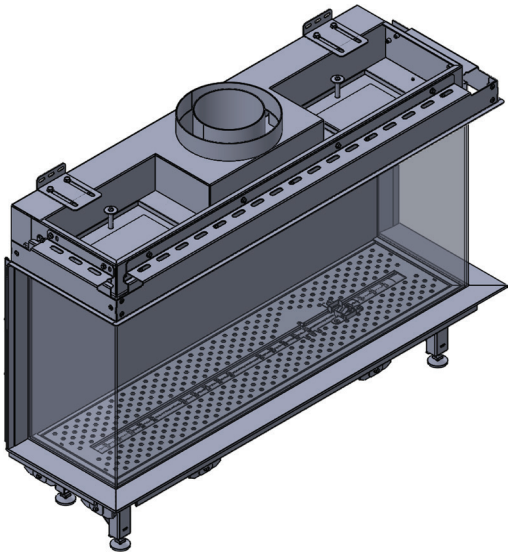

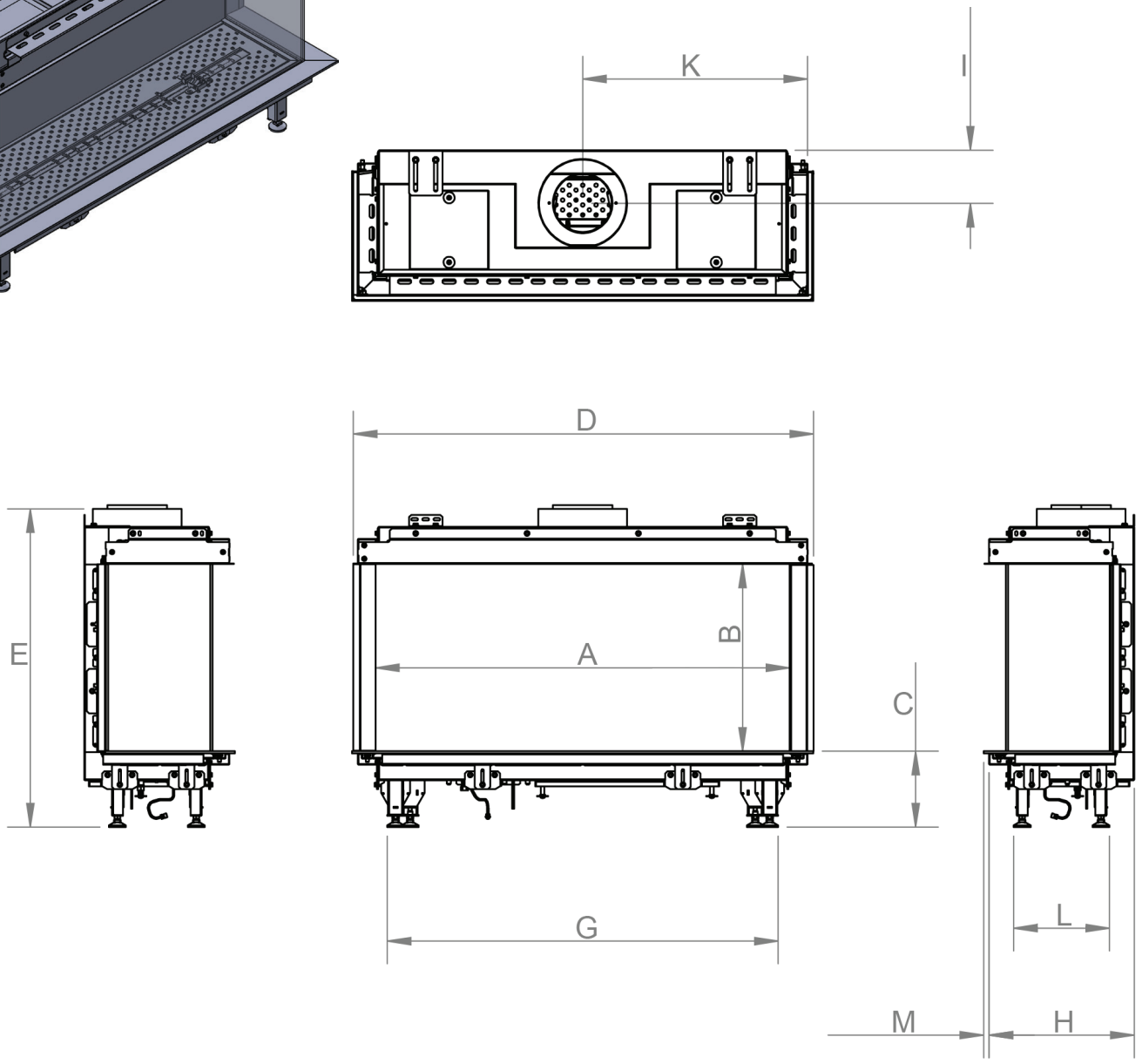

LETTERS	A	B	C	D	E	G	H	I	K	L	M
INCHES [MILLIMETERS]	$36\frac{5}{8}$" [930]	$16\frac{9}{16}$" [420]	$6\frac{11}{16}$" [170]	$40\frac{11}{16}$" [1034]	$28\frac{1}{8}$" [714]	$34\frac{9}{16}$" [878]	$12\frac{13}{16}$" [326]	$4\frac{11}{16}$" [119]	$19\frac{7}{8}$" [505]	$8\frac{7}{16}$" [215]	$\frac{1}{2}$" [12]

Figure 8

A downloadable DWG file is available at www.europeanhome.com for dimensions not shown.

SPECIFICATIONS and DIMENSIONS

PARTS OF THE FIREPLACE

The various parts of the 95 MKII Series fireplaces are shown below(Figures 10 and 11). These parts are typical of any Element4 fireplace.

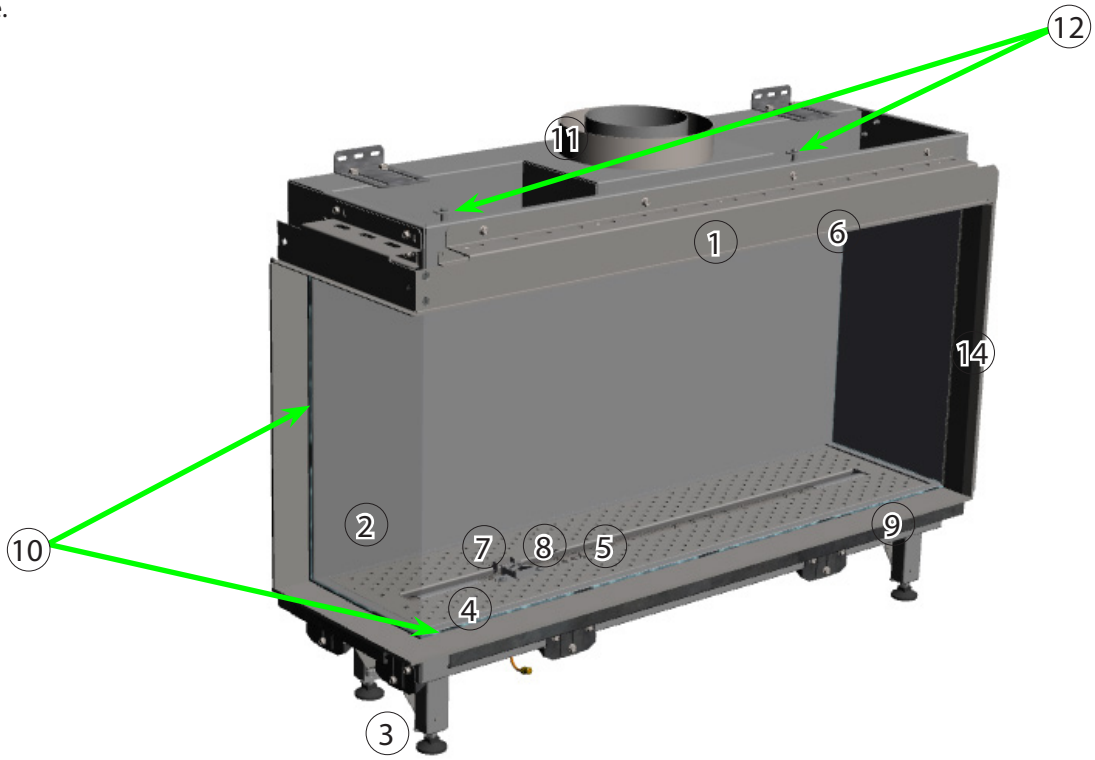

Figure 9

Table of Fireplace Parts	
1	Outer Frame Face- surrounds the glass panels, limits the non-combustible wall board and allows air in.
2	Exterior Glass Panel(s) - (1 - Modore, 2 - Bidore, 3 - Trisore)
3	Support Feet - four adjustable feet allow the fireplace to be levelled
4	Hearth Panel - supports various Fire Media
5	Primary Burner - produces the flame
6	Flange
7	Pilot Burner - the part of the safety circuit which lights the Main Burner
8	2nd Thermocouple - the part of the safety circuit which monitors the Main Burner
9	Finish Trim - hides the Glass Clamps
10	Glass Rope Gaskets - holds the Glass Panel in place (2 ea. - Modore 95, 3 ea. - Bidore 95, 4 ea. - Trisore 95)
11	Vent Collar - accepts the 5" x 8" venting adapter (included)
12	Relief Door - part of the safety system. Do NOT block the operation.
13	Pilot Assembly
14	Upright Trim - (2 ea.)

Figure 10

SPECIFICATIONS and DIMENSIONS

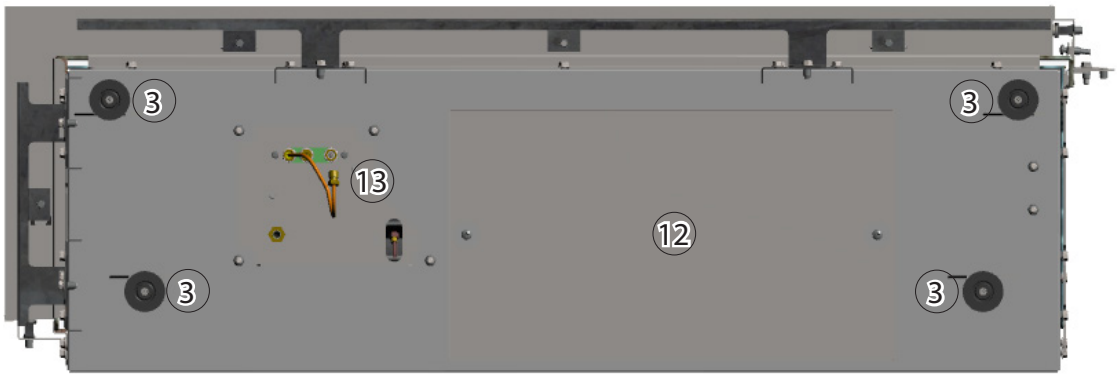

Figure 11: Fireplace from below

Table of Fireplace Parts	
1	Outer Frame Face- surrounds the glass panels, limits the non-combustible wall board and allows air in.
2	Exterior Glass Panel(s) - (1 - Modore, 2 - Bidore, 3 - Trisore)
3	Support Feet - four adjustable feet allow the fireplace to be levelled
4	Hearth Panel - supports various Fire Media
5	Primary Burner - produces the flame
6	Flange
7	Pilot Burner - the part of the safety circuit which lights the Main Burner
8	2nd Thermocouple - the part of the safety circuit which monitors the Main Burner
9	Finish Trim - hides the Glass Clamps
10	Glass Rope Gaskets - holds the Glass Panel in place (2 ea. - Modore 95, 3 ea. - Bidore 95, 4 ea. - Trisore 95)
11	Vent Collar - accepts the 5" x 8" venting adapter (included)
12	Relief Door - part of the safety system. Do NOT block the operation.
13	Pilot Assembly
14	Upright Trim - (2 ea. - Modore, Bidore, Trisore 95)

Figure 12

CLEARANCES

These are **NOT** zero-clearance fireplaces. All clearances to combustible AND non-combustible materials MUST be maintained as described in this manual.

LOCATING THE FIREPLACE

When selecting a location for the fireplace:

- Ensure that all minimum clearances to combustible AND non-combustible materials are met.
- Provide adequate clearances for servicing.
- Consider venting dimensions (rise, run and number of elbows, etc.) when selecting the location for your fireplace.
- Locate the appliance out of traffic and away from furniture and draperies.
- Keep the location free of electrical, plumbing or other heating/air conditioning ducting.

PLACING THE FIREPLACE

The base upon which the appliance rests (Figure 13) must be sturdy, level and built to safely support at least 800 pounds (363 kilograms). The base may be the floor or a purpose-built raised platform, e.g. wood, metal. When placed on a platform, an 8" (203 mm) x 6" (152 mm) opening must be cut through the platform top. The lineset can be routed through this opening. Room air must be allowed to flow through convection air inlets and then through this platform opening.

Figure 13

Do not place anything between the bottom of the firebox and the bottom of the feet.

MINIMUM CLEARANCE TO COMBUSTIBLES

- The appliance is approved with a minimum clearance to combustible materials of 26" (660 mm) to the top, 11" (280 mm) on all sides and 4" (100 mm) to the bottom. Any spacer or framing used closer than this dimension must be non-combustible (e.g. metal).

- The minimum distance from the bottom of the appliance to the room ceiling is 72" (1830 mm).

- When installing the venting, the following clearances to combustible materials MUST be maintained:
  a. 3" (76 mm) above any horizontal venting
  b. 1" (25 mm) to venting sides or below any horizontal venting

- Do not block or restrict the Air Inlet, located between the standoff frame and glass.

The minimum clearances (air spaces) to combustible materials must be maintained. It is of the greatest importance that the fireplace and vent system be installed only in accordance with these instructions.

Clearance to combustibles summary:

Back:	**11" (280 mm)**
Front:	**11" (280 mm)**
Sides:	**11" (280 mm)**
Top:	**26" (660 mm)**
Floor:	**4" (100 mm)**

The **Floor** dimension (above) is measured from the bottom of the firebox. When the adjustable feet are in their lowest position the required clearance to the floor is maintained.

ENSURE THAT THE LINESET (WHICH INCLUDES THE GAS VALVE, ELECTRICAL WIRING, AND GAS LINES) DOES NOT IMPEDE THE FULL OPERATION OF THE RELIEF DOORS. IT IS YOUR RESPONSIBILITY TO ENSURE THE SAFETY OF THESE CRITICAL COMPONENTS THROUGHOUT THE INSTALLATION PROCESS. REMOVE AND DISPOSE OF ALL WRAPS AND TIES.

CLEARANCES TO **COMBUSTIBLE** MATERIAL

*Clearances to **Combustibles***	
Sides (Non-Glass Sides ONLY)	11″
Top	26″
Bottom	4″

Figure 14

CLEARANCES TO **NON-COMBUSTIBLE** MATERIAL

*Clearances to **Non-Combustibles***	
Sides (Non-Glass Sides ONLY)	2″
Top	2″
Bottom	4″

Figure 15

No material of any kind is allowed between the bottom of the support feet and the bottom of the firebox (except for the lineset).

No material of any kind is allowed within 2″ (50 mm) of the top of the fireplace.

No material of any kind is allowed within 2″ (50 mm) of the metal sides the fireplace.

Facing material should be installed against the outer frame of the fireplace, with an ⅛″ (3 mm) vertical or horizontal clearance TO THE FLANGE to allow for heat expansion.

Non-combustible materials may be installed to a zero clearance to the outer faces of the appliance outer frame face. However, they must not cover (or prevent the removal of) the glass panels or other fireplace parts.

The appliance must not be installed on any combustible material other than wood.

These clearances are the same for ALL Element 4 Fireplaces, regardless of model.

We recommend that the fireplace be set into its final location before building the enclosure.

*Please refer to the "**Reduced Clearance to Existing Combustible Wall**" section for use of combustibles inside of the above clearances.*

CLEARANCES

MANTELS

The graph below (Figure 17) shows a range of allowable depths and heights for a **COMBUSTIBLE** mantel installation.

As shown, the minimum allowable mantel height above the fireplace opening is 2" (50 mm) with a 1" (25 mm) deep mantel.

The maximum mantel depth is 12" (300) mm at a minimum height above the fireplace opening of 13" (330 mm.)

All of the mantel height/depth combinations fall in between these extremes in accordance with the chart below.

Mantels made of *non-combustible* material are allowed inside these dimensions but they will be subjected to elevated temperatures and may become too hot to touch.

A typical completed installation with mantel is shown in the diagram below, on the right.

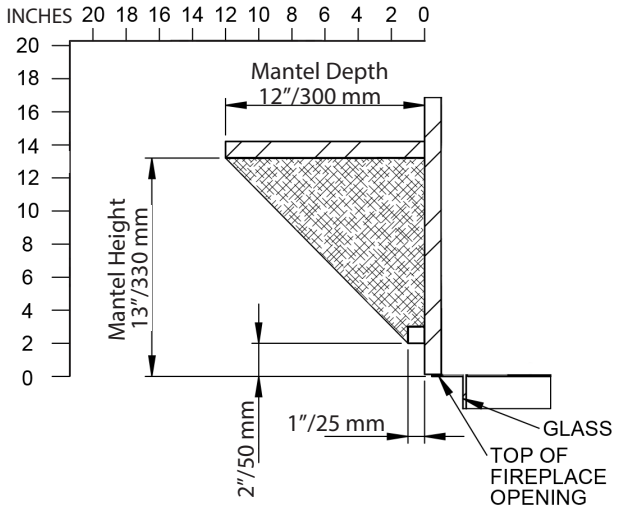

Figure 16

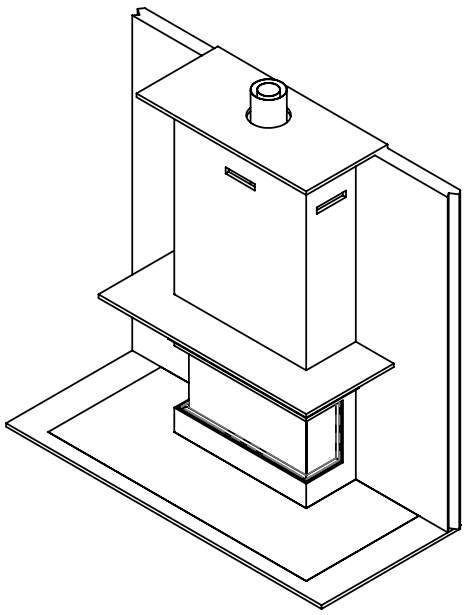

Figure 17

CLEARANCES

TYPICAL CLEARANCE DIAGRAMS

The total area of the air openings must be maintained. The location of the openings must allow for the free movement of air and must not allow excessive warm air to build up within the chase.

The top of the Warm Air Outlet must be *no more* than 1" (25 mm) down from the *chase* ceiling.

The minimum distance from the bottom of the appliance to the room ceiling is 72" (1830 mm).

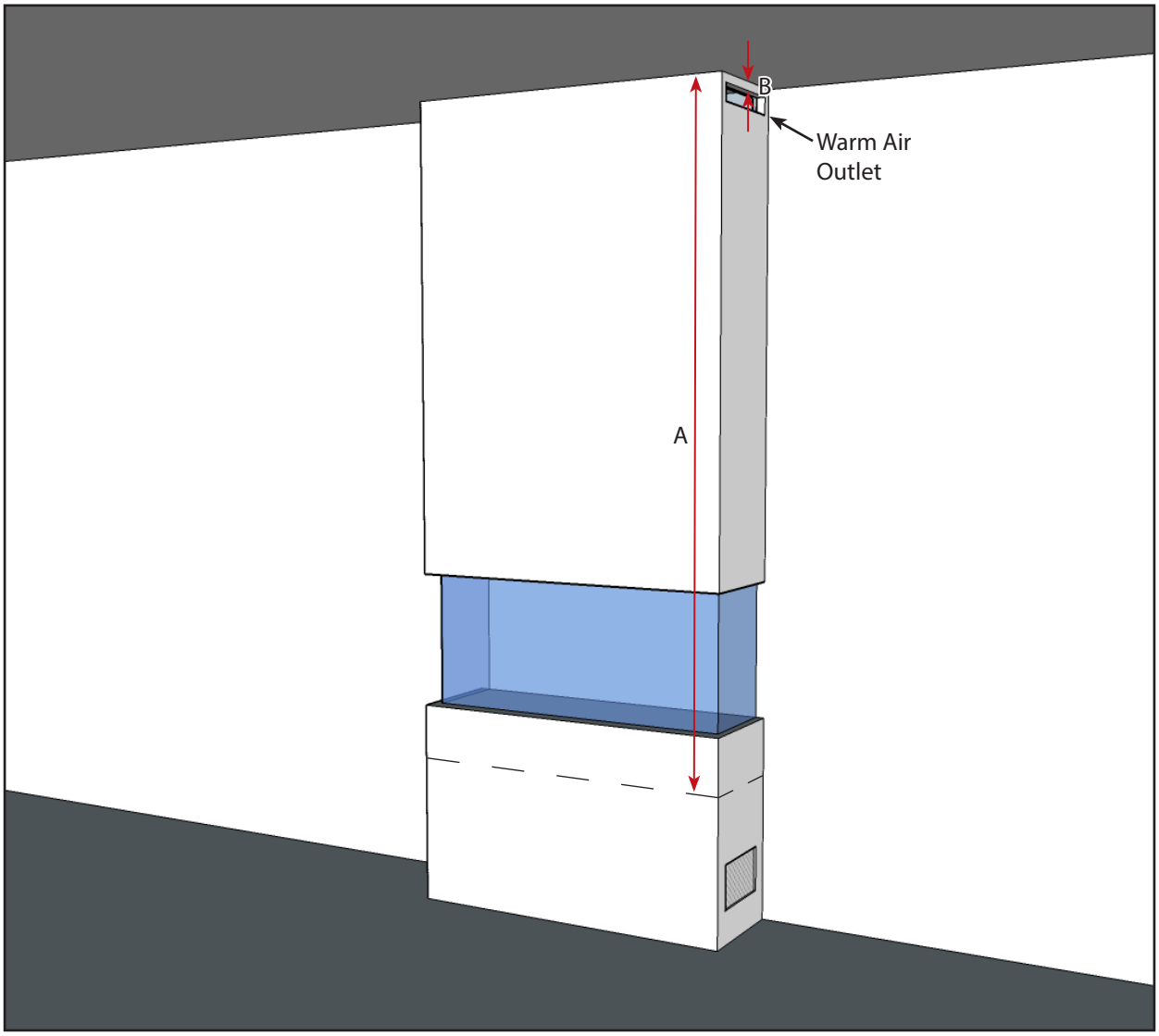

Figure 18

Minimum Distances		
A	Room ceiling to appliance bottom	72" 1830 mm
B	Room ceiling to top of Air Outlet	1" 25 mm

Figure 19

Air Outlet Area by Model		
Model	*Square Inches*	*Square Centimeters*
Modore 95 MKII	50	322
Bidore 95 MKII	50	322
Trisore 95 MKII	50	322

Figure 20

GAS and ELECTRIC

INSTALLING THE GAS LINE

In accordance with the latest edition of the National Fuel Gas Code, NFPA 54 (USA) or CAN/CSA-B149.1 (Canada,) correctly size and route the gas supply line from the supply regulator to the area where the appliance is to be installed.

Never use galvanized or plastic pipe unless it is rated for use with gas. Gas supply pipes must be designed, routed, constructed and made of materials that are in strict accordance with local codes and regulations. A qualified plumber or gas fitter should be hired to correctly size and route the gas supply line to the appliance in accordance with all applicable codes and regulations.

Installing a gas supply line from the fuel supply to the appliance involves numerous considerations of materials, protection, sizing, locations, controls, pressure, sediment trap, and other criteria. The sizing and/or installing of gas piping should only be performed by a qualified plumber or gasfitter.

The gas control inlet accepts a ⅜" NPT fitting.

The gas supply piping should have a separate gas shutoff valve and a capped, ⅛" pipe tapping upstream of the valve for the purpose of reading pressure. A service shutoff valve must be placed within six feet of the fireplace gas control valve.

The gas supply pressure at the gas control valve **must not exceed the Maximum Supply Pressure** as shown in the *Specifications and Dimensions* section of this manual**.**

The gas supply line must be properly connected and bled by a certified gasfitter or plumber.

The appliance and its main gas valve must be disconnected from the gas supply piping system during any pressure testing of that system at test pressures in excess of ½ psi (3.5 kPa). The appliance must be isolated from the gas supply piping system by closing its equipment shutoff valve during any pressure testing of the gas supply piping system at test pressures equal to or less than ½ psi (3.5 kPa).

ELECTRICAL REQUIREMENTS

The Element 4 fireplaces use a receiver and remote control for their burner operation. The remote control comes with two AAA batteries and the receiver is powered by a 120V AC adapter, included. The fireplace **MUST** be powered by the AC adapter for improved reliability and customer satisfaction.

The installer must provide an approved 120V AC receptacle to be placed within the six foot cord limit of the AC adapter.

The receiver **MUST** be powered by the AC adapter. Four (4) AA batteries may be used only for on-demand electrical requirement during a power outage. Remove batteries after use to avoid battery corrosion. Battery corrosion will damage the receiver.

WARNING

Electrical work must be performed by a qualified, licensed electrician.

All wiring shall be in compliance with all local, city, and state codes.

CONFIGURING THE VENTING

The fireplaces in this manual are direct vent fireplaces that use a co-axial or "pipe within a pipe" venting system. The outer "pipe" or vent conducts fresh, outside air into the fireplace and the inner vent carries the exhaust outside. This system, which can run either horizontally through a side wall or vertically through the roof, produces an efficient system because conditioned building air is not used for combustion.

- Only the 5" x 8" direct vent components from the companies listed below (Figure 22) are approved for use with these fireplaces. Any of the 5" x 8" direct vent components suitable for the local condition are permitted. Please visit www.europeanhome.com/qr-support or via the QR code below for installation instructions.
- This fireplace is shipped with a North American venting adapter (Figure 21). It MUST attach to the vent collar of the fireplace.
- All venting measurements are taken from the top center of the vent collar on the top of the fireplace and all configurations must fall within the acceptable range of the venting charts.
- A minimum clearance of 3" (75 mm) must be maintained between combustible materials and the top of any horizontal vent pipe surface; a minimum clearance of 1" (25 mm) must be maintained between combustible materials and any other vent pipe surface.

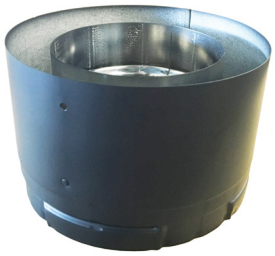

Figure 21: North American Vent Adapter

- The horizontal parts of the venting must be pitched up away from the fireplace. For every 12" (305 mm) of horizontal run, the venting must rise ¼" (6.5 mm) toward the termination. The venting must never run downward unless with the use of a power vent.
- Whenever venting passes through a wall, an approved heat shield or 'wall thimble' must be installed.
- A power vent system is available for venting that falls outside of the venting graphs. Refer to the appropriate power vent manual for any venting configuration which is outside of the vent graphs shown here.
- Your venting needs to be inspected annually, including any connected components, to ensure that the system is working as designed.
- In colder climate environments, the fireplace can be lowered to STANDBY MODE (Pilot Flame only). This will help maintain a steady draft within the venting over a period of up to five days. See the "Operating the Fireplace" section.

APPROVED COMPONENTS and MANUFACTURERS
DirectVent Pro *(M&G DuraVent, Inc.)*
EXCELDirect *(ICC - Industrial Chimney Company)*
Pro-Form *(BDM - Bernard Dalsin Manufacturing)*
Direct-Temp *(Selkirk Corporation)*
AmeriVent Direct Vent *(Hart & Cooley Inc.)*
Ventis Direct Vent *(Olympia Chimney Supply, Inc.)*

Figure 22

Please visit www.europeanhome.com/technical-support/
for the power venting installation manuals

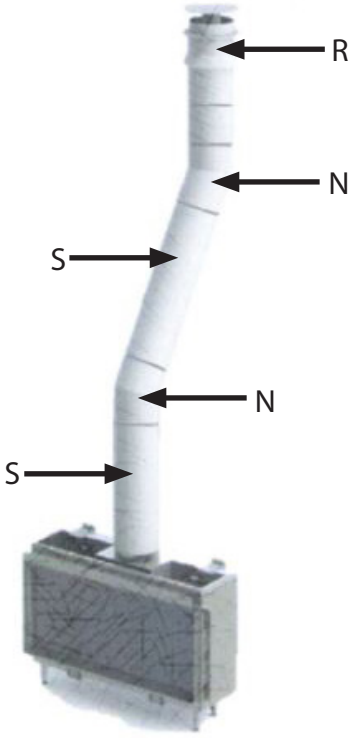

Figure 23

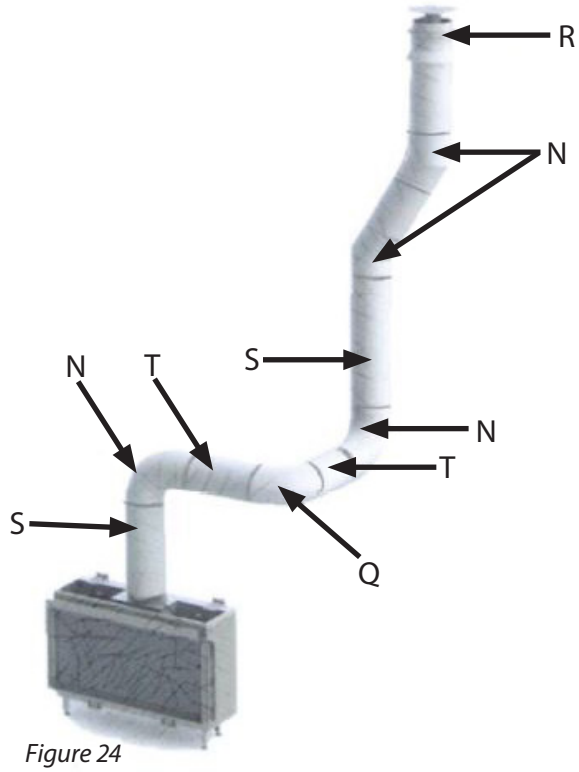

Figure 24

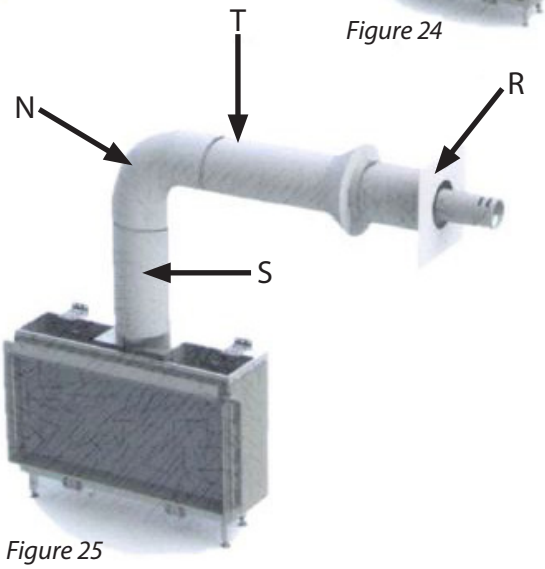

Figure 25

Vertical or Horizontal Vent Termination	R
45 or 90 degree bends Vertical to Horizontal or vice versa	N
45 and 90 degree bends Horizontal to Horizontal	Q
Horizontal Pipe Section	T
Vertical Pipe Section	S

Figure 26

CALCULATING THE TOTAL VERTICAL SECTION (TVS)

Calculate the Total Vertical Section by adding up all vertical upward sections in your specific vent design.

CALCULATING THE TOTAL HORIZONTAL SECTION (THS)

Calculate the Total Horizontal Section by adding up all horizontal sections in your specific vent design.

BEWARE OF ELBOWS

Elbows create resistance to the movement of air through your venting configuration and they must be included when determining your minimum and maximum vent lengths. *There must be a minimum vertical rise of 20" (508mm) before any elbow.*

Elbows are called either 'vertical' or 'horizontal' depending on their mounted position. The two types of elbows are:

TYPE N - 45° or 90° elbows which transition from vertical to horizontal and vice versa. This can be called an *upright* elbow.
TYPE Q - 45° or 90° elbows which transition from horizontal to horizontal. This can be called an *flat* elbow.

No more than four 90° elbows OR eight 45° elbows OR a combination totaling no more than 360° 'elbow degrees' are allowed. For example, a combination of two 90° elbows and two 45° elbows is allowed (90° + 90° + 45°+ 45° equals 270°) but a combination of three 90° elbows and three 45° elbows is not allowed (the total equals 405°.)

APPLYING THE RESULTS

The first (3) N elbows do not need to be included in venting calculations. For an elbow-degree count greater than 270°, the following applies:

- for either **Type N** elbow you must add 40" (1m) to your **THS**
- for a 90° **Type Q** elbow you must add 80" (2m) to your **THS**
- for *each* 45° **Type Q** elbow you must add 40" (1m) to your **THS**

0	venting possible, no restrictor needed
35	venting possible, 35mm restrictor needed
x	venting NOT possible

Figure 27

Once you have found your total vertical section (**TVS**) and your total horizontal section (**THS**) plot the intersection of these two numbers on the appropriate chart, located in the Element 4 Vent Chart Manual.

The intersecting block will have one of three entries; **0**, **35**, or **X**:

If your **TVS** and **THS** intersect at a block with an "0" the configuration is possible without a restrictor.
If your **TVS** and **THS** intersect at a block with an "35" the configuration is possible and a 35 mm restrictor must be used.
If your **TVS** and **THS** intersect at a block with an "X" the configuration is not possible.

INSTALLING A RESTRICTOR

Some vent configurations may require a restrictor plate (Figure 29) to be installed. The restrictor for this fireplace is installed on the inside top of the fireplace and is to be slid open or closed. Loosen the screws on either side and slide the restrictor as desired. Do not modify the restrictor(s). Please use the graph above (Figure 28) to determine if you will need to use a restrictor.

Figure 28

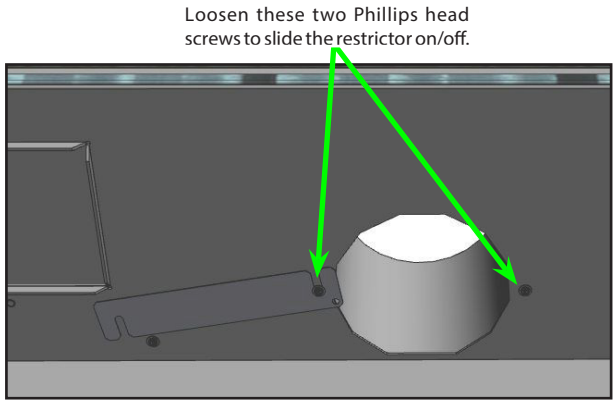

Figure 29

VERTICAL TERMINATION CLEARANCES AND REQUIREMENTS

Important Note for Roof Terminations

These instructions should be used as a guideline and do not supersede local codes in any way. Install venting according to local codes, these instructions, the current National Fuel Gas Code (ANSI Z223.1 in the USA) or the current standard of CAN/CSA-B149.1 in Canada.

Vertical Vent Termination Clearances

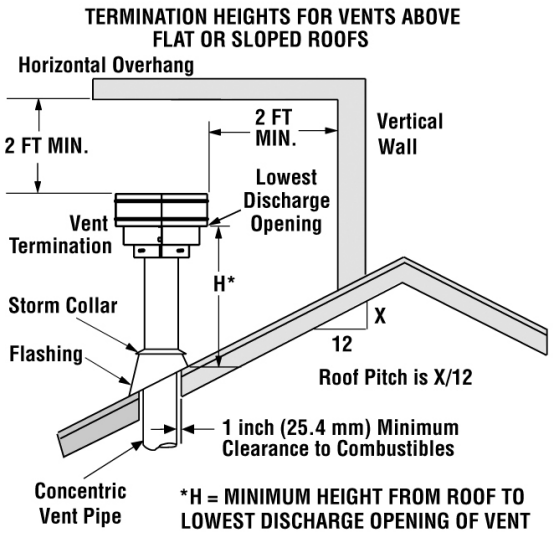

The vent / air intake termination clearances above the high side of an angled roof is as shown in the following chart:

Termination Heights For Vents Above Flat Or Sloped Roofs Ref. NFPA 54 / ANSI Z223.1		
Roof Pitch	*** Feet**	*** Meters**
Flat to 6/12	1.0	0.3
6/12 to 7/12	1.25	0.38
7/12 to 8/12	1.5	0.46
8/12 to 9/12	2.0	0.61
9/12 to 10/12	2.5	0.76
10/12 to 11/12	3.25	0.99
11/12 to 12/12	4.0	1.22
12/12 to 14/12	5.0	1.52
14/12 to 16/12	6.0	1.83
16/12 to 18/12	7.0	2.13
18/12 to 20/12	7.5	2.29
20/12 to 21/12	8.0	2.44

A second termination may be no closer than 12"/305 mm.

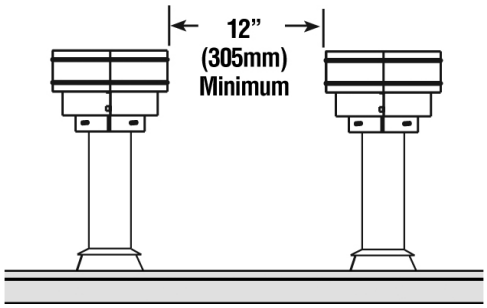

Multiple Termination Clearance

HORIZONTAL VENT TERMINATION CLEARANCES AND REQUIREMENTS

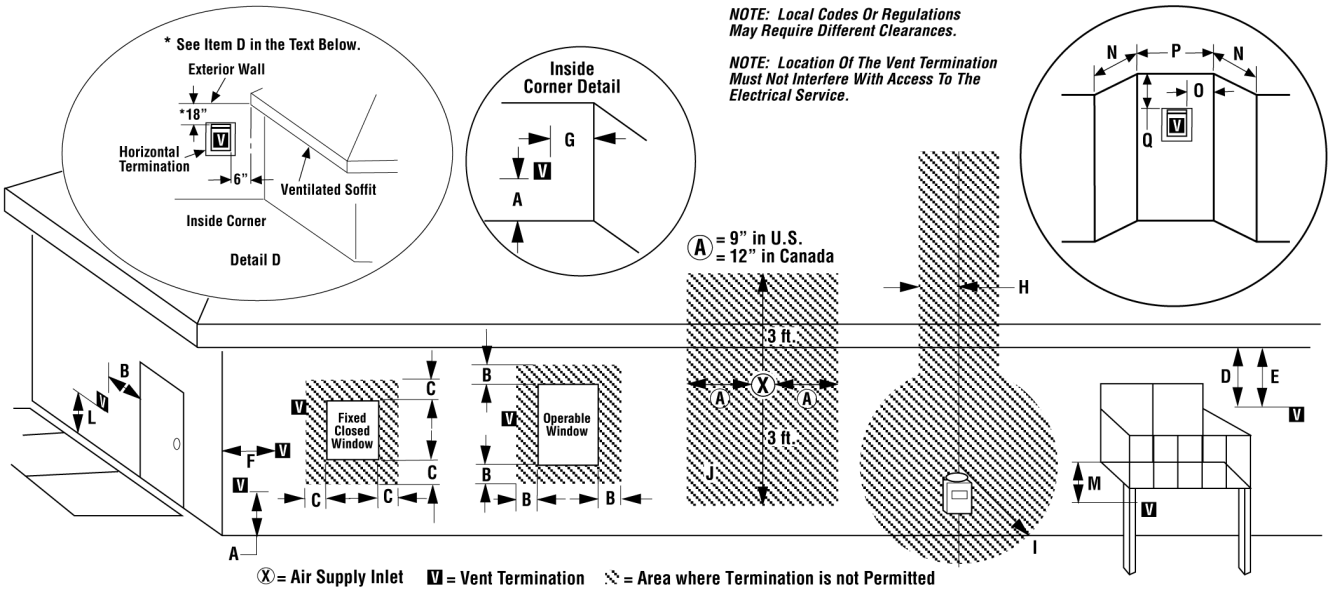

	US Installation**	Canadian Installation*
A = Clearance above grade, veranda, porch, deck, or balcony.	12 inches (30cm)**	12 inches (30cm)*
B = Clearance to window or door that may be opened.	6 inches (15cm) for appliances < 10,000 Btuh (3kW), 9 inches (23cm) for appliances > 10,000 Btuh (3kW) and < 50,000 Btuh (15kW), 12 inches (30cm) for appliances > 50,000 Btuh (15kW)**	6 inches (15cm) for appliances < 10,000 Btuh (3kW), 12 inches (30cm) for appliances > 10,000 Btuh (3kW)
C = Clearance to permanently closed window	9 inches (229mm) recommended to prevent window condensation	12 inches (305mm) recommended to prevent window condensation
D = Vertical clearance to ventilated soffit located above the termination within a horizontal distance of 18 inches (458mm) from the center line of the termination	18 inches (458mm)	18 inches (458mm)
E = Clearance to unventilated soffit	12 inches (305mm)	12 inches (305mm)
F = Clearance to outside corner	5 inches (12.7cm) minimum	5 inches (12.7cm) minimum
G = Clearance to inside corner	6 inches (15 cm) minimum - SV4.5HT-2	6 inches (15 cm) minimum - SV4.5HT-2
H = Clearance to each inside of center line extended above meter/regulator assembly	3 feet (91cm) within a height of 15 feet above the meter/regulator assembly**	3 feet (91cm) within a height of 15 feet above the meter/regulator assembly*
I = Clearance to service regulator vent outlet	3 feet (91cm)** Lorem Ipsum	3 feet (91cm)*
J = Clearance to nonmechanical air supply inlet to building or the combustion air inlet to any other appliance	6 inches (15cm) for appliances < 10,000 Btuh (3kW), 9 inches (23cm) for appliances > 10,000 Btuh (3kW) and < 50,000 Btuh (15kW), 12 inches (30cm) for appliances > 50,000 Btuh (15kW)**	6 inches (15cm) for appliances < 10,000 Btuh (3kW), 12 inches (30cm) for appliances > 10,000 Btuh (3kW)
K = Clearance to a mechanical air supply inlet	3 feet (91cm) above if within 10 feet (3m) horizontally**	6 feet (1.83m)*
L = Clearance above paved sidewalk or paved diveway located on public property	7 feet (2.13m)‡	7 feet (2.13m)‡
M = Clearance under veranda, porch, deck or balcony	12 inches (30cm)‡	12 inches (30cm)*‡
N = Depth of Alcove (Maximum)	6 feet (1.83m)**	6 feet (1.83m)*
O = Clearance to Termination (Alcove)	6 inches (15.2mm)**	6 inches (15.2mm)*
P = Width of Alcove (Minimum)	3 feet (91cm)*	3 feet (91cm)*
Q = Clearance to Combustible Above (Alcove)	18 inches (457mm)**	18 inches (457mm)*

* In accordance with the current CSA-B149.1 National Gas And Propane Installation Code.
** In accordance with the curent ANSI SZ223.1/NFPA 54 National Fuel Gas Codes.
‡ A vent shall not terminate directly above a sidewalk or paved driveway which is located between two single family dwellings and serves both dwellings.
*‡ Only permitted if veranda, porch, deck or balcony is fully open on a minimum 2 sides beneath the floor:

ENCLOSING the FIREPLACE

COMBUSTIBLE MATERIALS

Materials that can catch fire and burn are considered combustible. Any material that is made of, or faced with wood, wood pulp, paper, plastic or any other material that can catch fire and burn is considered combustible. Even though these materials may have been 'flame-proofed', made 'fire-resistant' or are 'fire-rated' they are considered combustible. **Standard and Type X drywall are combustible.**

NON-COMBUSTIBLE MATERIALS

A material is non-combustible when it cannot catch fire and burn. For example, materials made of stone, brick, concrete, tile, steel, plaster or glass are non-combustible.

The table below (Figure 30) shows a list of materials which are reported by their manufacturers to be non-combustible (in accordance with the ASTM E136 standard) **AND** approved for use around fireplaces.

Skamol Skamotec® 225 and the Promat PROMAFOUR® system are preferred products for enclosing fireplaces.

Product	*Thickness*
Skamol Skamotec® 225 Fireplace Building Board	1½" (38 mm)
Promat PROMAFOUR® System	½" (12 mm)
James Hardie Building Products HardieBacker® 500 ½" Cement Board	½" (12 mm)
James Hardie Building Products HardieBacker® ¼" Cement Board	¼" (6 mm)

*Figure 30: * The listed brand names are trademarks of their respective companies.*

Skamol Americas, Inc.
(844) 475-2665
E-mail: skamotec225@skamol.com
www.skamotec225.com

Promat Inc.
(865) 681-0155
E-mail: sales@promat.us
www.promat.us/en

James Hardie Building Products
(888) 542-7343
www.jameshardie.com

ENCLOSING the FIREPLACE

BUILDING THE ENCLOSURE/FRAMING

A safe installation of your Element4 fireplace requires that three things be clearly understood.

1. Most important, these fireplaces are NOT zero-clearance fireplaces. Unlike zero-clearance fireplaces, there is not an outer metal box around the Element4 fireplaces which increases the framing dimensions.

2. Only the non-combustible wall around the glass, the platform (floor,) the mounting brackets and the venting may touch the fireplace.

3. The controls will be inside the enclosure and below the burner. The controls are at the end of a line set and are to be accessed via an access door (not included.) The controls must be located for ease of physical access (gas line, maintenance, etc.) as well as wireless signal (remote control) access. See the LOCATING THE CONTROLS and the MOUNTING THE CONTROLS sections. A wall access door should have a total opening of 25 in^2 (161 cm^2) for access to the controls.

4. A separate 10 in^2 (25 cm^2) opening in the wall must be provided near the access door to provide cool air to the controls.

It may seem straightforward to build the 'rough opening', set the fireplace then attach the wall. However, ***for most projects***, it will be easier to first set the fireplace in position then enclose it with Skamol Skamotec® or Promat PROMAFOUR® building board.

REDUCED CLEARANCE TO EXISTING COMBUSTIBLE WALLS

When retrofitting the fireplace against an existing wall it is often desirable to reduce the distance between the fireplace and the combustible wall. Normally, this distance is 11" (280 mm) but it may be reduced by shielding the existing finished wall with a 1" (25mm) air gap and a sheet of non-combustible material as shown on the following page.

IN ALL CASES:

- A reduced clearance "wall protection shield" is ONLY ALLOWED ON A VERTICAL WALL; IT IS NOT ALLOWED TO BE USED ON HORIZONTAL OR ANGLED SURFACES WITHIN THE NON-COMBUSTIBLE ZONE.

- The "wall protection shield" shall be placed no closer than 1" (25 mm) to the floor or any intersecting walls. Air MUST be allowed to continually circulate around all sides of the wall shield.

- A 1" (25 mm) air gap between the wall shield and the existing wall MUST be maintained.

- A 2" (50 mm) air gap between the wall shield and the fireplace MUST be maintained.

ENCLOSING the FIREPLACE

REDUCED CLEARANCE TO EXISTING COMBUSTIBLE WALLS

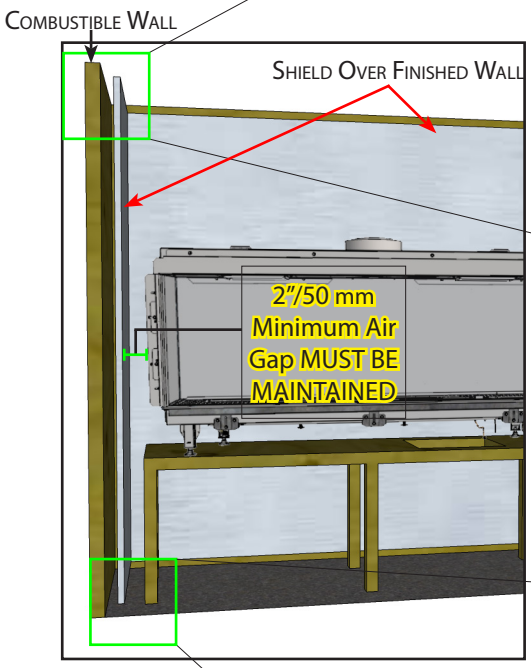

Figure 31

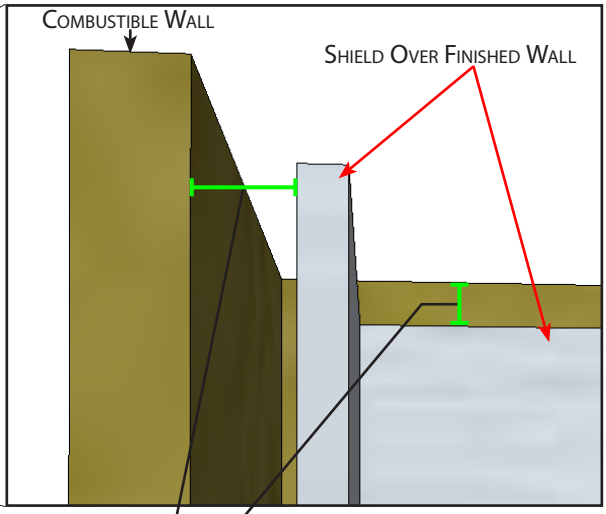

Figure 32

1"/25 mm Minimum Air Gap MUST BE MAINTAINED

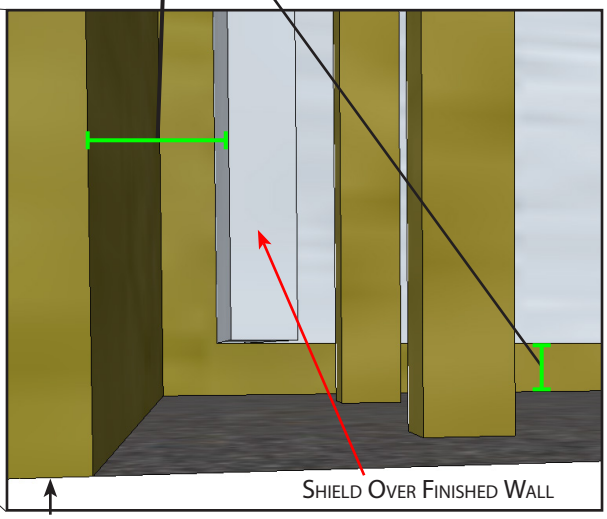

Figure 33

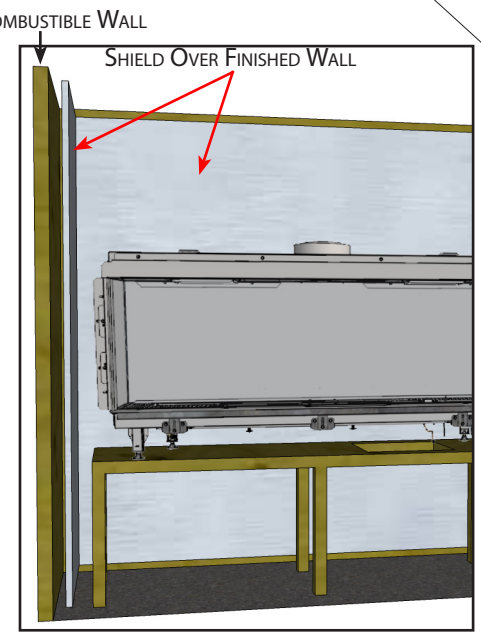

Figure 34

ENCLOSING the FIREPLACE

The finished wall(s) must be at least ½"/12 mm thick or the fireplace trim will extend beyond the finished wall. The list below (Figure 44) shows the thickness of the approved wall products.

Your choice of wall material depends largely on the intended finish. For example, a thinner wall product and a layer of stone may be thick enough to reach the trim edge. If a painted finish is desired then a wall at least ½"/12 mm thick will suffice.

Product	*Thickness*
Skamol Skamotec® 225 Fireplace Building Board	1½" (38 mm)
Promat PROMAFOUR® System	½" (12 mm)
James Hardie Building Products HardieBacker® 500 ½" Cement Board	½" (12 mm)
James Hardie Building Products HardieBacker® ¼" Cement Board	¼" (6 mm)

Figure 35

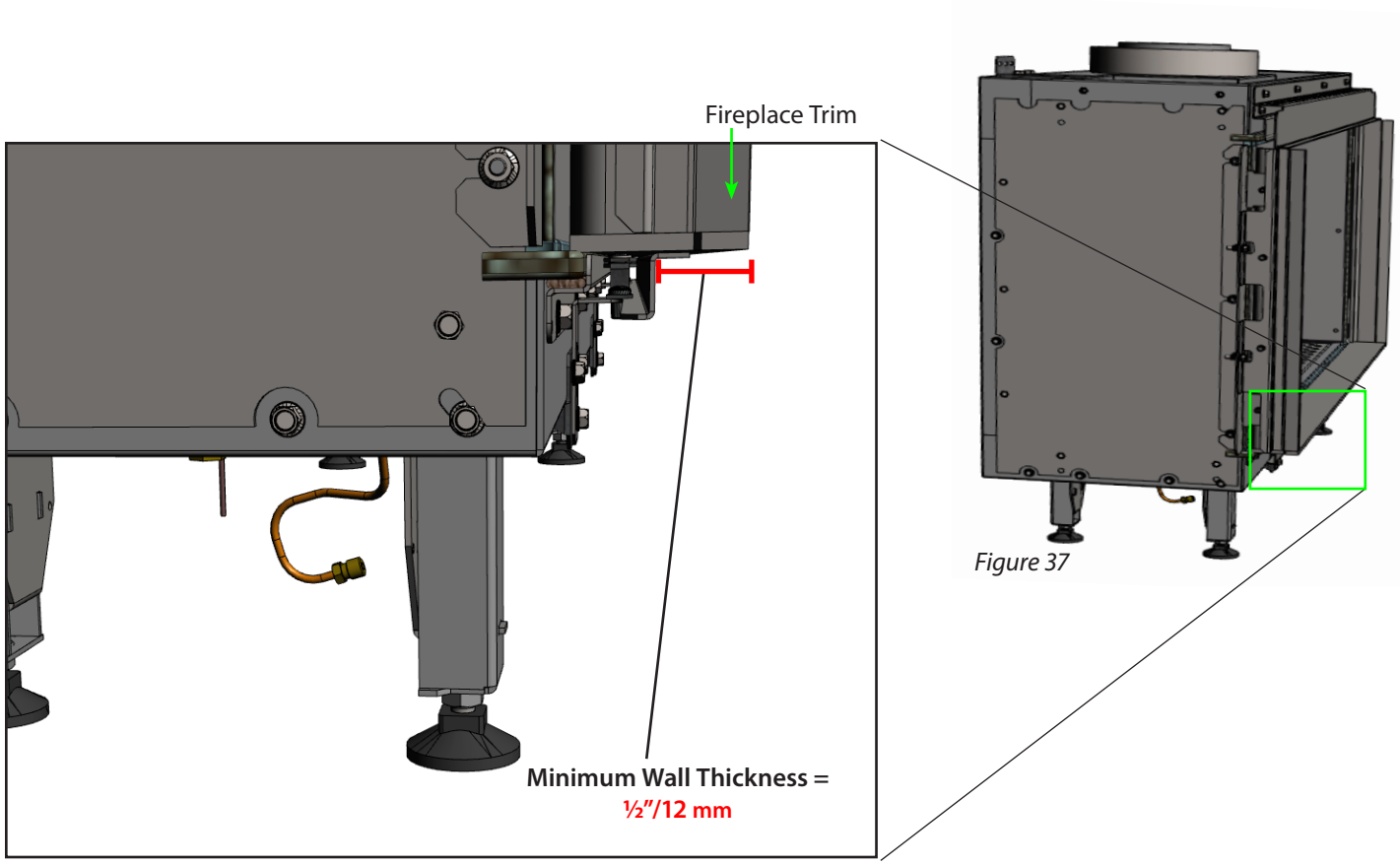

Figure 36

Figure 37

MINIMUM AREA REQUIRED FOR BIDORE 95

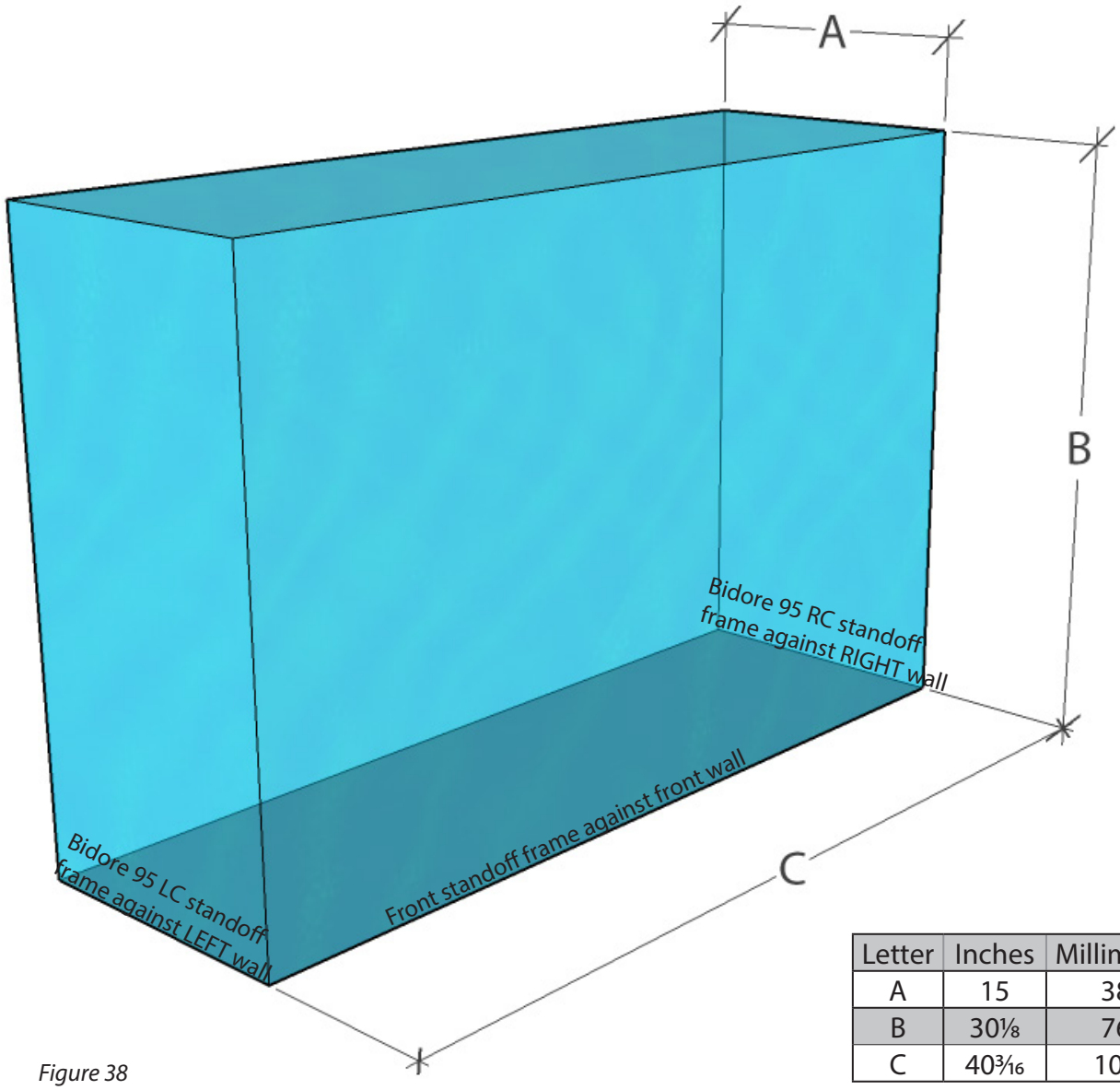

Figure 38

Letter	Inches	Millimeters
A	15	381
B	30⅛	765
C	40 3⁄16	1020

When enclosing the Bidore 95 fireplace there is a minimum clear area which must be maintained. Nothing except the Bidore 95 may be within this area. When enclosed, the Bidore 95 MKII LC is against the left wall or the Bidore 95 RC is against the right wall. This minimum area *MUST BE DEFINED BY NON-COMBUSTIBLE MATERIAL*. The *inside* of the enclosing walls (including any necessary framing) may be no less than the distances (A, B and C) shown above.

Your installation *will* use more than this minimum cabinet space in order to accommodate controls, venting, air openings, etc. We recommend that the fireplace be set into its final location before building the enclosure.

MINIMUM AREA REQUIRED FOR MODORE 95

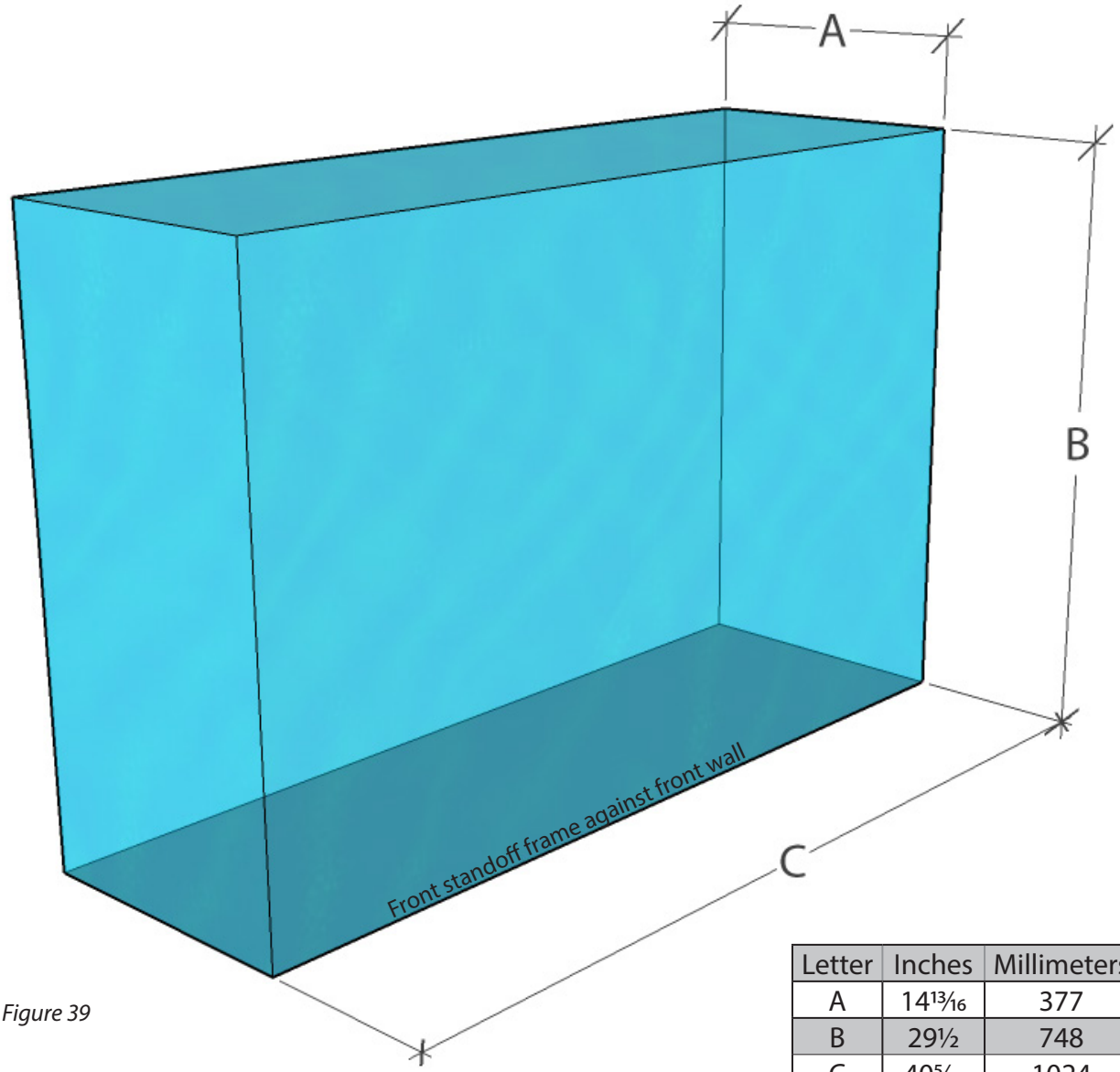

Figure 39

Letter	Inches	Millimeters
A	14 13/16	377
B	29½	748
C	40 5/16	1024

When enclosing the Modore 95 fireplace there is a minimum clear area which must be maintained. Nothing except the Modore 95 may be within this area. When enclosed, the Modore 95 is centered between the left and right enclosing walls. This minimum area *MUST BE DEFINED BY NON-COMBUSTIBLE MATERIAL*. The *inside* of the enclosing walls (including any necessary framing) may be no less than the distances (A, B and C) shown above.

Your installation *will* use more than this minimum cabinet space in order to accommodate controls, venting, air openings, etc. We recommend that the fireplace be set into its final location before building the enclosure.

MINIMUM AREA REQUIRED FOR TRISORE 95

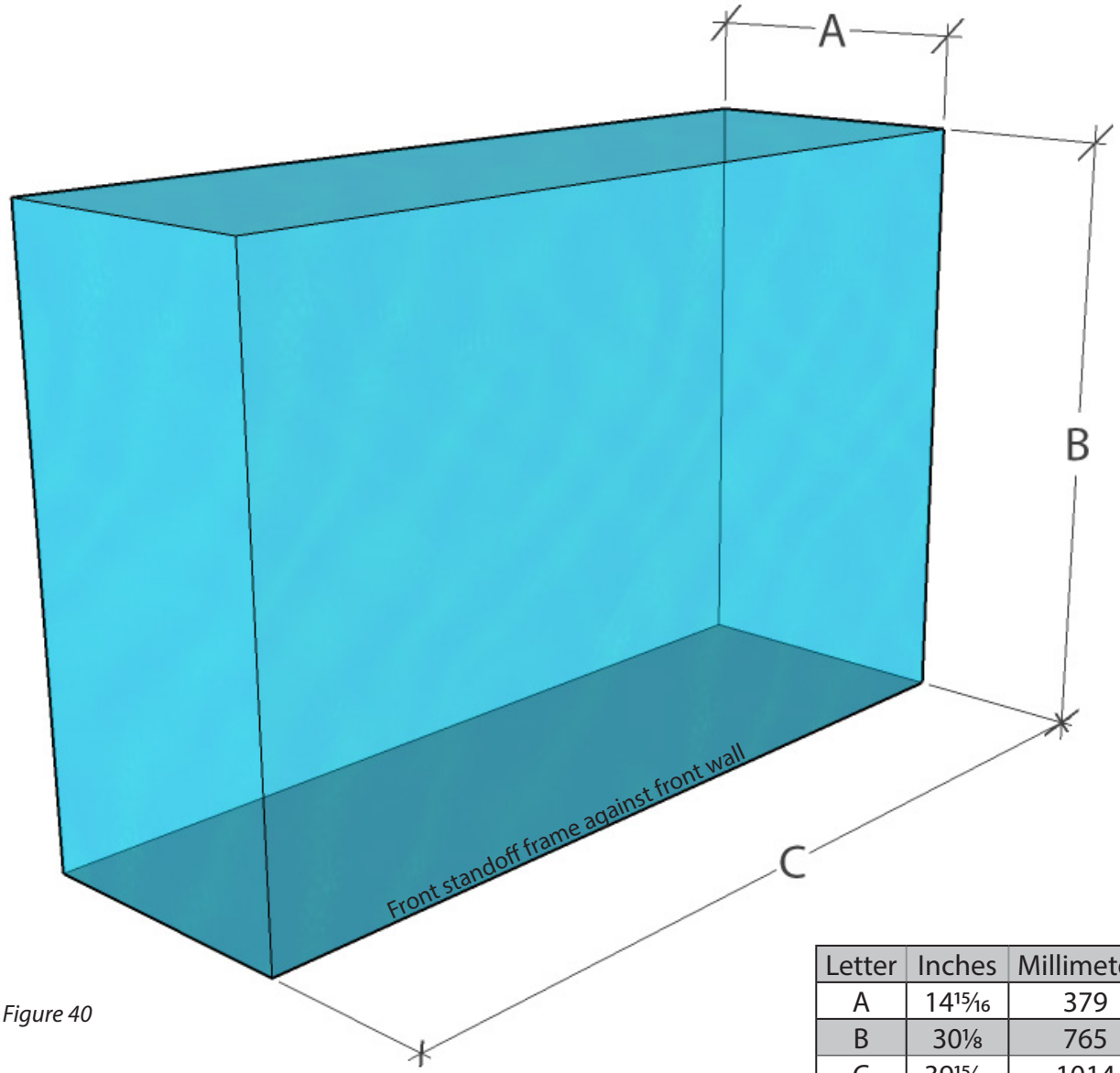

Figure 40

Letter	Inches	Millimeters
A	14 15/16	379
B	30 1/8	765
C	39 15/16	1014

When enclosing the Trisore 95 fireplace there is a minimum clear area which must be maintained. Nothing except the Trisore 95 may be within this area. When enclosed, the Trisore 95 is centered between the left and right enclosing walls. This minimum area *MUST BE DEFINED BY NON-COMBUSTIBLE MATERIAL*. The *inside* of the enclosing walls (including any necessary framing) may be no less than the distances (A, B and C) shown above.

Your installation *will* use more than this minimum cabinet space in order to accommodate controls, venting, air openings, etc. We recommend that the fireplace be set into its final location before building the enclosure.

ENCLOSING the FIREPLACE

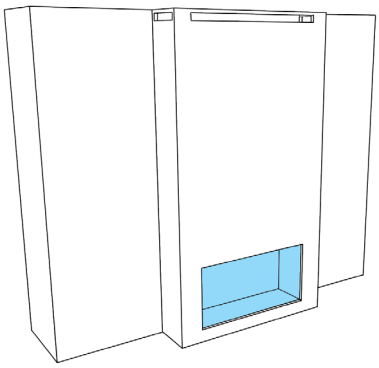

Figure 41: Modore 95 with Air Outlets in Wall

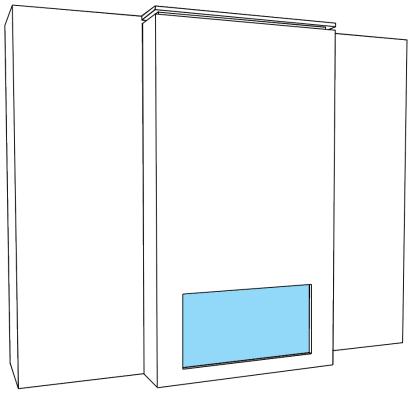

Figure 42: Modore 95 with Air Outlet in Reveal

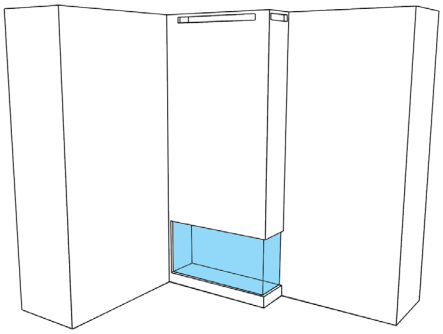

Figure 43: Bidore 95 with Air Outlets in Wall

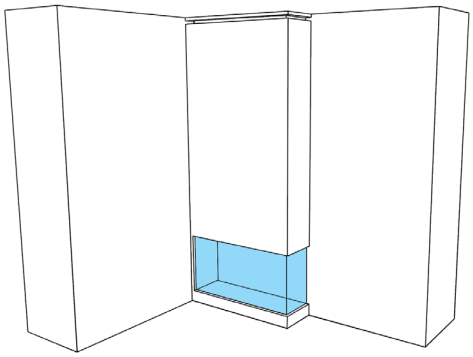

Figure 44: Bidore 95 with Air Outlet in Reveal

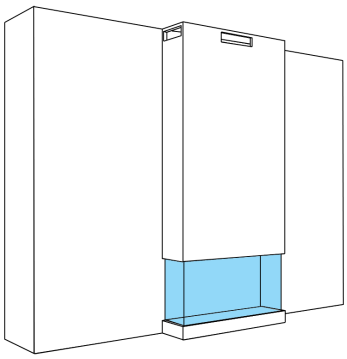

Figure 45: Trisore 95 with Air Outlets in Wall

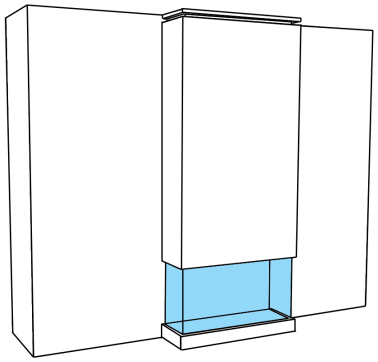

Figure 46: Trisore 95 with Air Outlet in Reveal

Air Outlet Area by Model		
Model	*Square Inches*	*Square Centimeters*
Modore 95	50	322
Bidore 95	50	322
Trisore 95	50	322

Figure 47

ENCLOSING the FIREPLACE

DO NOT ALLOW THE FIREPLACE TO BEAR ANY WEIGHT

Dimensions A, B, and C must be equal throughout the installation.

Any support framing (NON-combustible framing ONLY) must be at least 2" (50 mm) away from any part of the fireplace. The entire weight of the non-combustible walls must be borne by a structure other than the fireplace.

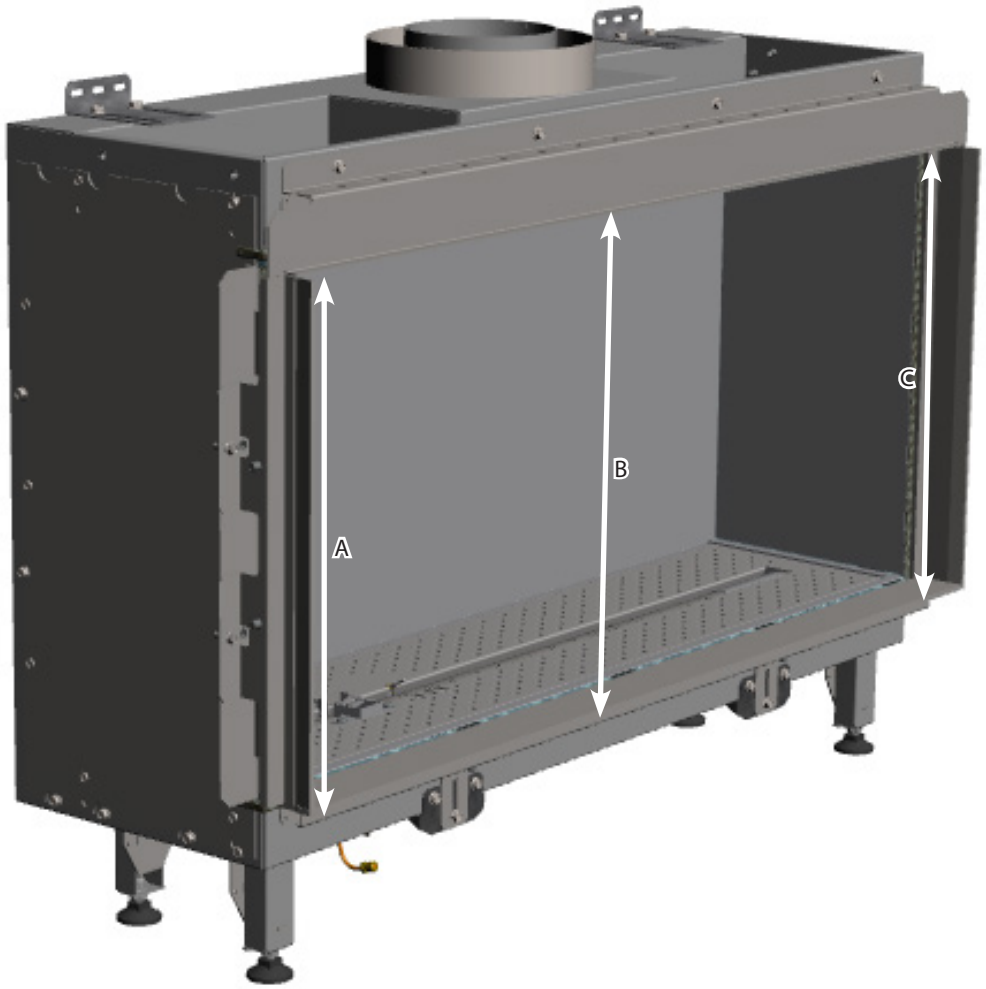

Figure 49: Modore 95 shown. The Bidore and Trisore models have the same requirement.

Use the adjustable feet to ensure that the fireplace is level prior to enclosing it.

Do NOT lift the fireplace by the face frame but by the bottom of the cabinet.

ENCLOSING the FIREPLACE

COLD CLIMATE INSULATION

For cold climate installations, it is especially important to insulate outside the chase cavity, between studs and under the floor on which appliance rests, if floor is above ground level. Gas line holes and other openings should be filled with approved firestop.

If the fireplace is being installed on a cement slab in cold climates, a sheet of plywood or a raised platform can be placed underneath to prevent cold transferring to the fireplace and into the room. It also helps to tape the venting for maximum air tightness and to caulk the firestops.

LOCATING THE CONTROLS

The standard control system consists of four major components; the receiver, the remote control, the gas valve, and the power supply.

The remote control is the device by which you operate the fireplace. The receiver and the gas control are at one end of a line set which is connected to the firebox near the center. As shipped, the line set is wrapped together and fixed to the fireplace. Remove all wraps and ties prior to installation.

A wall access door is not provided with your fireplace. When locating the Wall Access Door you must consider four types of access:

1. *Air access*. Room air must be allowed to flow freely through the Wall Access Door perforations, the site-built platform and the fireplace chase. The Wall Access Door must be installed in the same room as the fireplace.
2. *Line set access*. The line set is to be unwrapped. Do not kink the lineset and do not bend to a radius of less than 2" (50 mm)
3. *Physical access*. The gas valve/receiver must be readily accessible for maintenance, etc.
4. *Wireless access*. The signals from the remote must get to the receiver, inside the access door.

If the access door is not perforated an air access equivalent 10 in² (25 cm²) as well as physical, wireless and line set access must be provided.

MOUNTING THE CONTROLS

Do not place the controls above the level of the burner. If the fireplace is to be set directly on the floor, the controls must be placed outside the non-combustible zone.

The table shows the dimensions and the suggested rough opening of an access door.

Suggested Wall Access Door Dimensions
Door Opening
12" x 12" (30 mm x 30 mm)

Figure 50

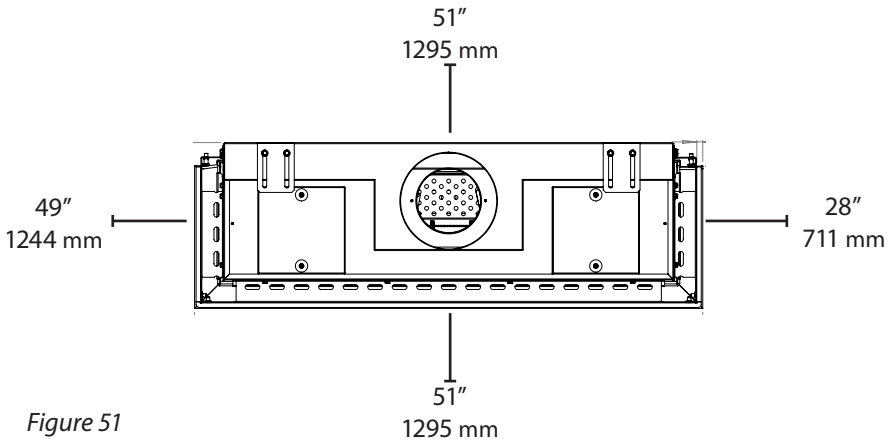

Figure 51

When measured at the level of the feet, the controls will reach no farther from the cabinet edge than shown at left. The drawing is not to scale.

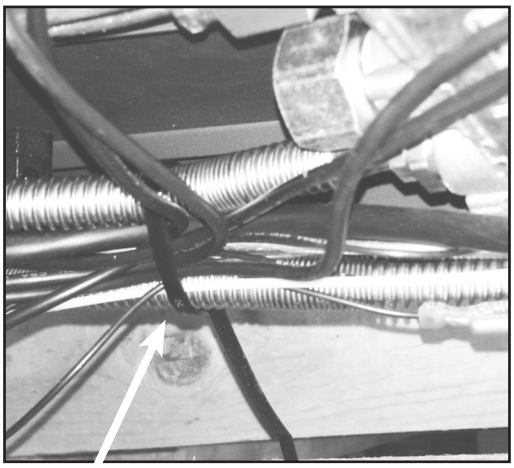

Figure 52

Carefully cut the black tie wraps which hold the line set to the bottom of the fireplace then carefully unwrap the line set. Lay the line set out towards the location of the Access Door. Do not kink the lineset and do not bend to a radius of less than 2"/50 mm.

TEST FIRE

Prior to being placed into operation, the fireplace should be test-fired in stages to ensure that all components are in good working order. This fireplace has a 2nd thermocouple which senses the burner flame. **The system will turn itself off if the system does not sense the 2nd thermocouple output within 29 seconds after the valve opens.**

If 2nd thermocouple is still hot enough to produce electricity at the receiver thus preventing the fireplace from starting, the remote will flash "OFF" to signal this safety lock out. Allow time for the 2nd thermocouple to cool down before attempting a start. The system is ready to start when the flashing "OFF" becomes solid on the remote and pressing the ON/OFF button produces a response from the valve.

1. Start the fireplace with the hearth panel out and with the front glass off. Ensure that the pilot flame both heats the primary thermocouple and lights the burner. For safety, a post-purge delay is built into the system. Subsequent start attempts MUST NOT take place for at least thirty (30) seconds.

2. Start the fireplace with the hearth panel in place and with all of the glass panels fixed correctly in place. Ensure that the main burner flames engulf the 2nd thermocouple and the fireplace stays lit for at least 1 full minute. If the system turns itself off after 29 seconds install the required media (next section) and return here. Installing the fire media will help with the flame around the 2nd thermocouple. Subsequent start attempts MUST NOT take place for at least five (5) minutes.

3. Start the fireplace with the media installed. If the system turns itself off after 29 seconds, rearrange the media to produce a good flame at the 2nd thermocouple. This step may have to be repeated several times before the media is in the best place for consistent operation. A single, long beep indicates that the 2nd thermocouple is still too hot to start the ignition sequence. Allow time for the 2nd thermocouple to cool down. Once the system stays lit for at least one full minute, turn the fireplace off, fix the glass panels in place and operate the fireplace for at least 45 minutes to ensure the system works properly when heated.

LOG ARRANGEMENT

Ensure that the hearth panels are properly placed and sitting firmly on the base of the fire box. The pilot flame must be visible through the panel and the cut-out in the pilot shield. Scatter the bag of chips evenly on the hearth panel and burners. Ensure that the area inside the pilot shield and the area around the 2nd thermocouple remains clear of media.

LSE 45 II Log Set Contents
- two pine cones
- seven logs
- two bags of black chips
- one bag of grey chips

With the embers scattered across the burner and hearth panel, lay the logs in the following sequence...

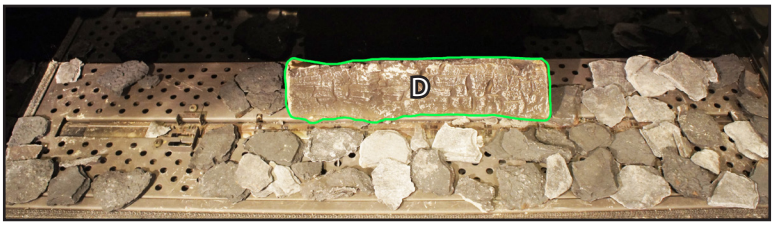

Figure 53

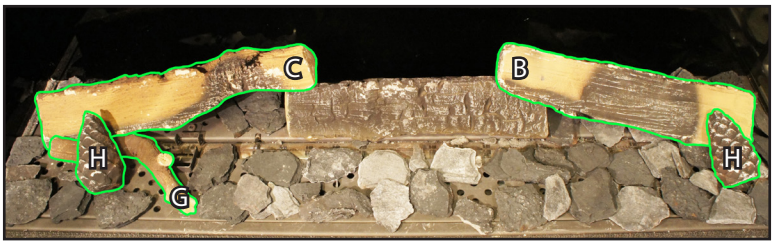

Figure 54

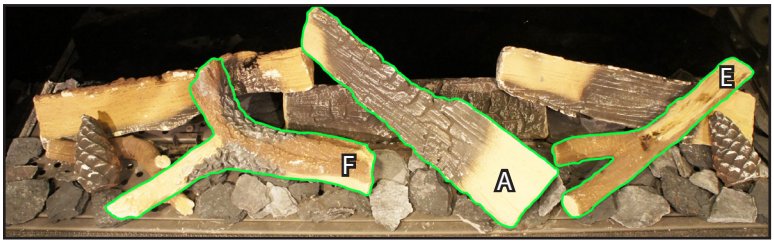

Figure 55

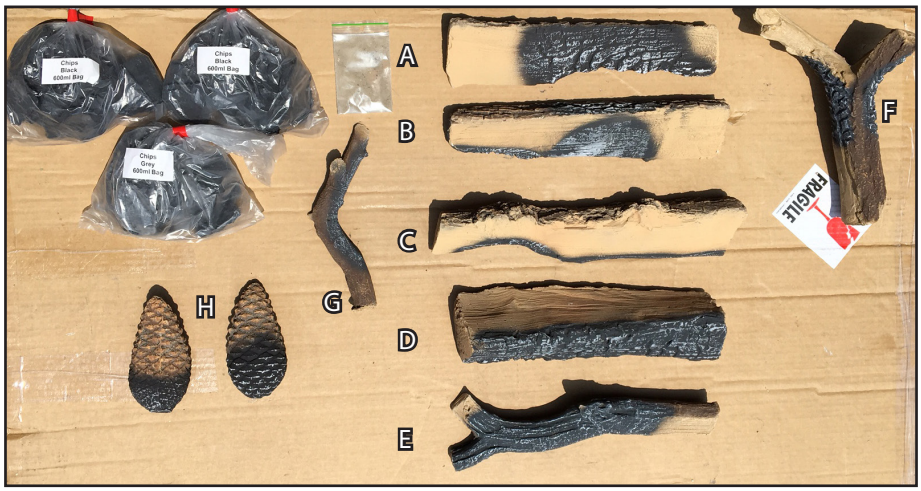

Figure 56

INSTALLING THE FIRE MEDIA

STONES/GLASS ARRANGEMENTS

Ensure that the hearth panel is level and sitting firmly on the base of the fire box. The pilot flame must be visible through the hearth panel and the pilot shield.

Evenly scatter the contents of the bag of stones/glass over the top of the hearth panel and burner. Ensure that none of the stones/glass enters the pilot area or restricts the operation of the 2nd thermocouple.

The arrangement is now complete. However, it is important to check that the pilot flame is still visible.

A shows the arrangement for stones; the arrangement for glass is similar. **B** (Figure 57) shows the pilot area clear of media.

Figure 57: Actual burner pilot assembly and thermocouple location may vary depending on model. (grey stones shown here)

C shows the 2nd thermocouple area (Figure *69*) clear of media (Figure *70*).

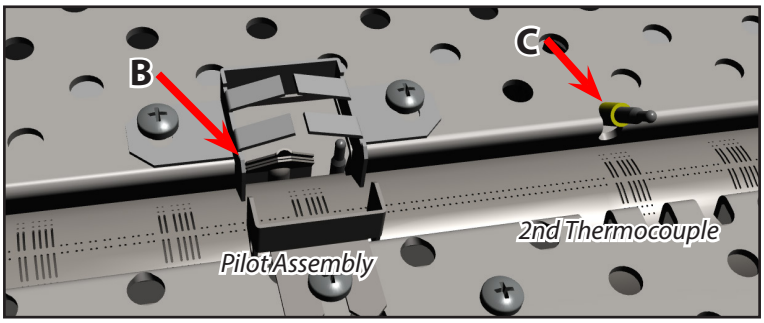

Figure 58

To see how to arrange media in an Element4 fireplace please visit the link below.

WWW.EUROPEANHOME.COM/RESOURCES/VIDEOS/

SCREEN INSTALLATION

MODORE 95	
Upper Tabs	3
Lower Tabs	3
Magnets	9
Long Screen	1
Short Screen	N/A

Figure 59

BIDORE 95	
Upper Tabs	4
Lower Tabs	4
Magnets	12
Long Screen	1
Short Screen	1

Figure 60

TRISORE 95	
Upper Tabs	5
Lower Tabs	5
Magnets	15
Long Screen	1
Short Screen	2

Figure 61

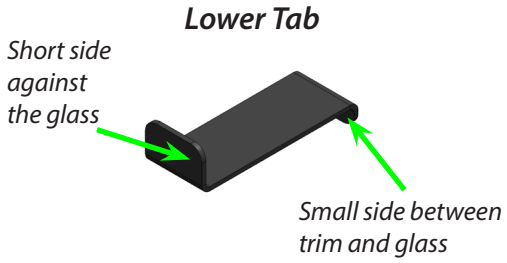

Figure 62

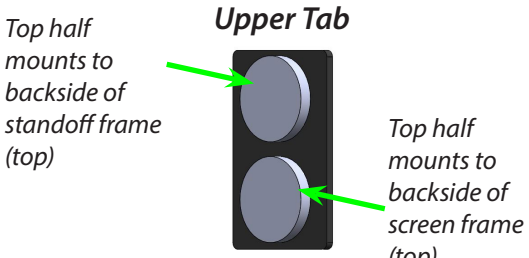

Figure 63

Figure 64: Short Screen

Figure 65: Long Screen

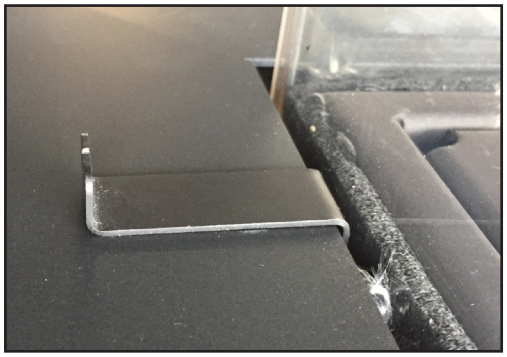

Figure 66

Place the two Lower Tabs on the trim, with the short side against the glass, about 2-3" from each corner of the glass. Place a magnet on the front of each tab.

SCREEN INSTALLATION

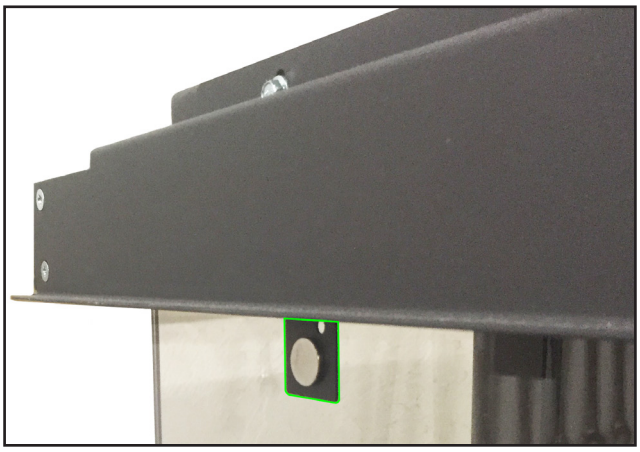

Figure 67

Place the two Upper Tabs on the inside of the top stand off frame. One magnet will be hidden, attached to the standoff frame. The other magnet will be exposed to attach to the screen.

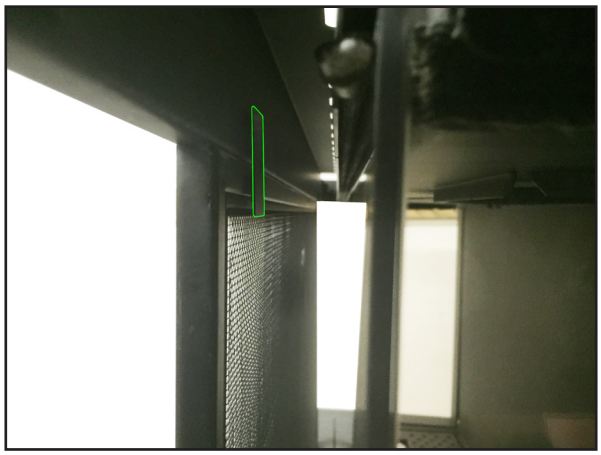

Figure 68

This is what the screen will look like when it is attached correctly to the top Upper Tabs (viewed from inside of the standoff frame).

SCREEN INSTALLATION

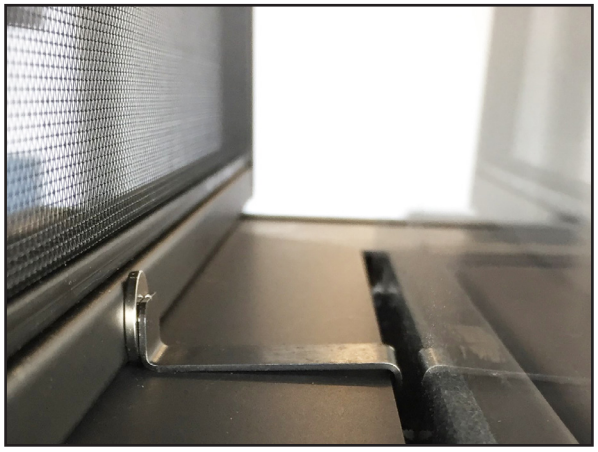

Figure 69

This is what the screen will look like when it is attached correctly to the Lower Tabs (viewed between the screen and the glass).

Figure 70

The screen is installed properly in the photo above. Ensure that all magnets are in the correct position and the tabs are secured.

OPERATING the FIREPLACE

BEFORE THE FIRST FIRE

1. Make certain that all construction materials have been removed from inside and around the fireplace and the fireplace has been cleaned of any construction dust. Clean the glass BEFORE and AFTER the first fire.
2. Confirm that the gas valve is properly connected and bled by a certified gas technician or plumber.
3. Check the gas supply for leaks and proper pressure. Refer to the table in "Appliance Ratings" section.
4. Check that the venting is unobstructed and in proper working condition.
5. **PROPERLY PLACE, CLAMP, AND SEAL THE GLASS PANELS.**
6. Ensure the receiver is powered with an AC Adapter **OR** Batteries, **NOT BOTH**.
7. Place the two (2) AAA batteries into the remote control and confirm that it will communicate with the receiver by pressing the ***ON***/***OFF*** button. If necessary pair the remote and receiver (see below).
8. Follow **USING THE REMOTE CONTROL ELECTRONIC IGNITION SEQUENCE** to setup and use remote.

PAIRING THE REMOTE AND RECEIVER (System Reset)

1. Press and hold the receiver reset button using a small, long tool until you hear the second of two beeps. After the second beep release the reset button.
2. Single Press the ▼ button on the remote, you will then hear two beeps. Then remote will flash "CONN" once it stops flashing the remotes will be synced. Wait 30 seconds before trying to start the fireplace.

   If you hear one long beep, this indicates the pairing sequence has failed or the wiring is incorrect. Re-synch the remote.

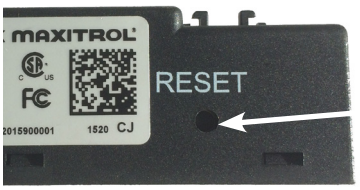

Figure 71

GAS VALVE KNOBS

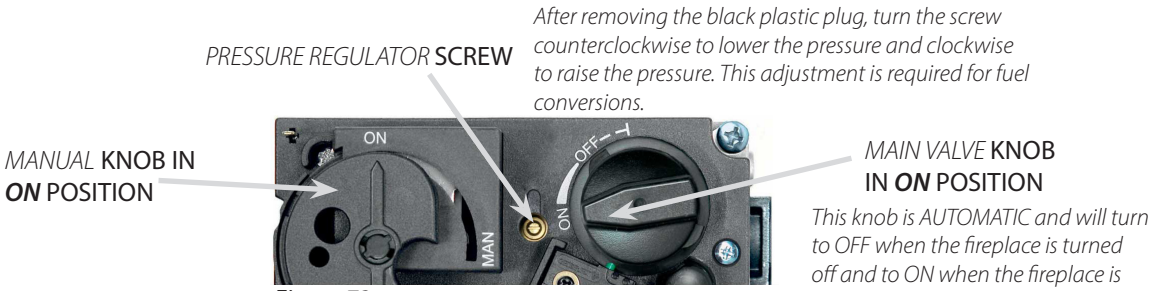

Figure 72

Note! For normal operation the *MANUAL* knob on the gas valve cannot be in the **MAN** position; it must be fully in the ***ON*** position.

OPERATING the FIREPLACE

10 BUTTON REMOTE CONTROL

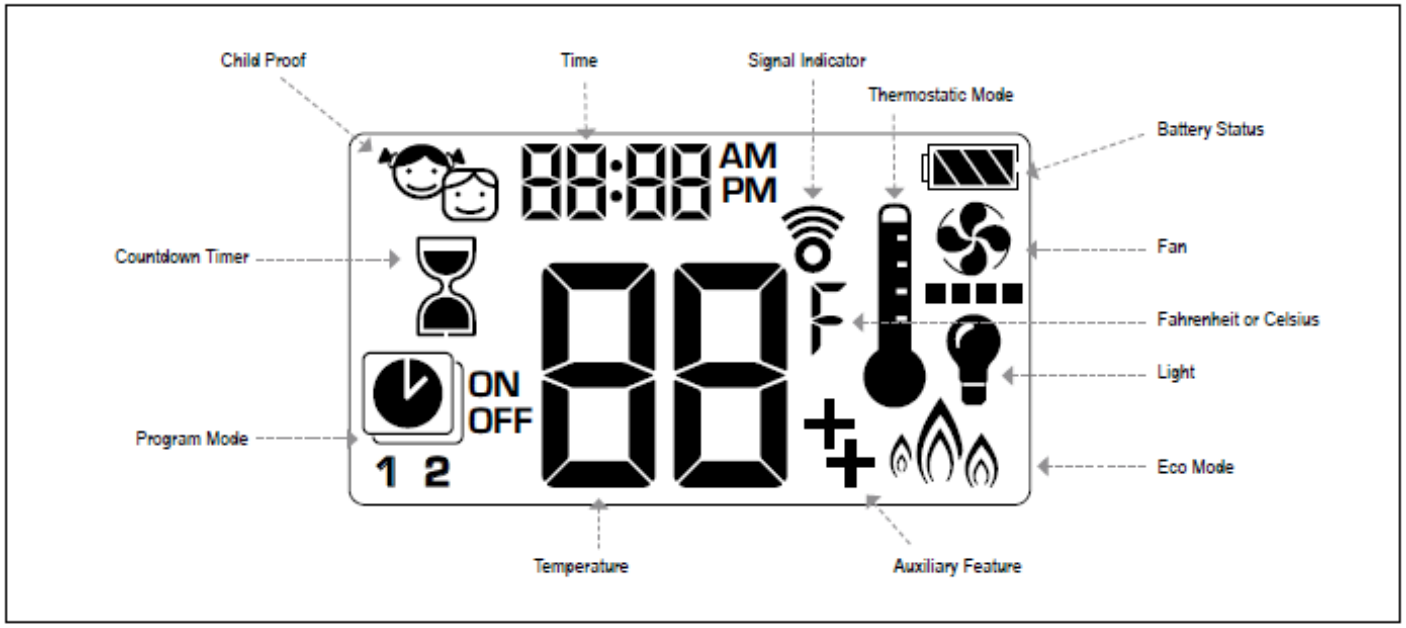

Figure 73

SETTING FAHRENHEIT or CELSIUS

Figure 74

To change between °C and °F, press ⏻ and ⌛ buttons simultaneously.

NOTE: Choosing °F results in a 12 hour clock. Choosing °C results in a 24 hour clock.

CHILD PROOF

Figure 75

ON:
To activate press ⏻ and ▼ buttons simultaneously. 🔒 displayed and the handset is rendered inoperable, except for the off function.

OFF:
To deactivate press ⏻ and ▼ buttons simultaneously. 🔒 disappears.

SETTING the TIME

Figure 76

1. Press ▲ and ▼ buttons simultaneously. **Day** flashes.
2. Press ▲ or ▼ button to select a number to correspond with the day of the week (e.g. 1=Monday, 2=Tuesday, 3=Wednesday, 4=Thursday, 5=Friday, 6=Saturday, 7=Sunday).
3. Press ▲ and ▼ buttons simultaneously. **Hour** flashes.
4. To select hour press ▲ or ▼ button.
5. Press ▲ and ▼ buttons simultaneously. **Minutes** flash.
6. To select minutes press ▲ or ▼ button.
7. To confirm press ▲ and ▼ buttons simultaneously or wait.

MANUAL MODE (HANDSET)

NOTICE

BEFORE OPERATING
1. Make sure MANUAL knob on the GV60 valve is in the **ON**, full counterclockwise ↶ position.
2. Place the ON/OFF switch (if equipped) in the **I** (ON) position.

TO TURN ON FIRE

⚠ WARNING

When pilot ignition is confirmed, motor turns automatically to maximum flame height.

OPERATING the FIREPLACE

Figure 77

Handset One-Button Operation
(Default Setting)

- Press ⏻ button until two short beeps and a blinking series of lines confirms the start sequence has begun; release button.
- Main gas flows once pilot ignition is confirmed.
- Handset automatically goes into Manual Mode after main burner ignition.

NOTICE

Change from one-button to two-button ignition operation by pressing and holding ⏻ button for 10 sec. immediately after installing batteries. **ON** is displayed and **1** is flashing. When change is complete **1** will change to **2**.

Figure 79

Handset Two-Button Operation

- Press ⏻ and ▲ button simultaneously until two short beeps and a blinking series of lines confirms the start sequence has begun; release buttons.
- Main gas flows once pilot ignition is confirmed.
- Handset automatically goes into Manual Mode after main burner ignition.

NOTICE

Change from two-button to one-button ignition operation by pressing and holding ⏻ button for 10 sec. immediately after installing batteries. **ON** is displayed and **2** is flashing. When change is complete **2** will change to **1**.

⚠ WARNING

If the pilot does not stay lit after several tries, turn the main valve knob to **OFF** and follow the instructions "TURN OFF GAS TO APPLIANCE" (page 19).

STANDBY MODE (PILOT FLAME)

Handset

- Press and hold ▼ button to set appliance to pilot flame.

TO TURN OFF FIRE

Figure 82

Handset

- Press ⏻ button to turn off.

NOTE: There is a 5 sec delay before the next ignition is possible.

FLAME HEIGHT ADJUSTMENT

Figure 78

Handset

- To increase flame height press and hold ▲ button.
- To decrease flame height or to set appliance to pilot flame, press and hold ▼ button.

DESIGNATED LOW FIRE and HIGH FIRE

NOTE: Backlight must be on for high fire and low fire double-click operation.

Figure 80

- To go to low fire, double-click ▼ button. LO is displayed.

NOTE: Flame goes to high fire first before going to low fire.

Figure 81

- To go to high fire, double-click ▲ button. HI is displayed.

⚠ WARNING

If the appliance will not operate, follow the instructions "TURN OFF GAS TO APPLIANCE" (page 19).

COUNTDOWN TIMER

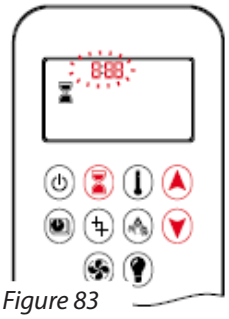

Figure 83

ON/SETTING:

1. Press and hold ⏳ button until ⏳ displayed, and **hour** flashes.
2. To select hour press ▲ or ▼ button.
3. To confirm press ⏳ button. **Minutes** flash.
4. To select minutes press ▲ or ▼ button.
5. To confirm press ⏳ button or wait.

OFF:
Press ⏳ button, ⏳ and countdown time disappear.

NOTE: At end of countdown time period, the fire turns off. The Countdown Timer only works in Manual, Thermostatic, and Eco Modes. Maximum countdown time is 9 hours and 50 minutes.

OPERATING the FIREPLACE

MODES of OPERATION

Figure 84

Thermostatic Mode
The room temperature is measured and compared to the set temperature. The flame height is then automatically adjusted to achieve the set temperature.

Figure 86

Program Mode
Programs 1 and 2, each can be programmed to go on and off at specific times at a set temperature.

Figure 88

Eco Mode
Flame height modulates between high and low. If the room temperature is lower than the set temperature, the flame height stays on high for a longer period of time. If the room temperature is higher than the set temperature, the flame height stays on low for a longer period of time. One cycle lasts approx. 20 min.

THERMOSTATIC MODE

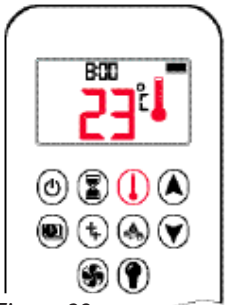

Figure 89

ON:
Press button. displayed, preset temperature displayed briefly, and then room temperature displayed.

OFF:
1. Press button.
2. Press or button to enter Manual Mode.
3. Press button to enter Program Mode.
4. Press button to enter Eco Mode.

Figure 91

SETTING:
1. Press button and hold until displayed, temperature flashes.
2. To adjust set temperature press or button.
3. To confirm press button or wait.

PROGRAM MODE

Figure 85

ON:
Press button. , **1** or **2**, **ON** or **OFF** displayed.

Figure 87

OFF:
1. Press or or button to enter Manual Mode.
2. Press button to enter Thermostatic Mode.
3. Press button to enter Eco Mode.

NOTE: The set temperature for Thermostatic Mode is the temperature for the on time in Program Mode. Changing the Thermostatic Mode set temperature also changes the on time temperature in Program Mode.

Default settings:
ON TIME (Thermostatic) TEMPERATURE: 21 °C (70 °F)
OFF TIME TEMPERATURE: "– –" (pilot flame only)

Figure 90

TEMPERATURE SETTING:
1. Press button and hold until flashes. **ON** and set temperature (setting in Thermostatic Mode) displayed.
2. To continue press button or wait. , **OFF** displayed, temperature flashes.
3. Select off temperature by pressing the or button.
4. To confirm press button.

NOTE: The on (Thermostatic) and off set temperatures are the same for each day.

Figure 92

DAY SETTING:
5. ALL flashes. Press or button to choose between ALL, SASU, 1, 2, 3, 4, 5, 6, 7.
6. To confirm press button.

OPERATING the FIREPLACE

ALL selected

Figure 93

ON TIME SETTING (PROGRAM 1):

7. , **1**, **ON** displayed, ALL is displayed shortly, and **hour** flashes.
8. To select hour press ▲ or ▼ button.
9. To confirm press ● button. , **1**, **ON** displayed, ALL displayed shortly, and **minutes** flash.
10. To select minutes press ▲ or ▼ button.
11. To confirm press ● button.

Figure 95

OFF TIME SETTING (PROGRAM 1):

12. , **1**, **OFF** displayed, ALL is displayed shortly, and **hour** flashes.
13. To select hour, press ▲ or ▼ button.
14. To confirm press ● button. , **1**, **OFF** displayed, ALL displayed shortly, and **minutes** flash.
15. To select minutes press ▲ or ▼ button.
16. To confirm press ● button.

NOTE: Either continue to PROGRAM 2 and set on and off times or stop programming at this point, and PROGRAM 2 remains deactivated.

NOTE: PROGRAM 1 and 2 use the same on (Thermostatic) and off temperatures for ALL, SASU and Daily Timer (1, 2, 3, 4, 5, 6, 7). Once a new on (Thermostatic) and/or off temperature has been set, that temperature becomes the new default setting.

NOTE: If ALL, SASU or Daily Timer are programmed for PROGRAM 1 and PROGRAM 2 on and off times, these become the new default times. The batteries must be removed to clear the PROGRAM 1 and PROGRAM 2 on and off times and temperatures.

SASU or Daily Timer (1, 2, 3, 4, 5, 6, 7) selected

- Set on time and off time using same procedure as "**ALL selected**" (above).
- SASU: Set on time and off time for both Saturday and Sunday.
- Daily Timer: Unique on and off times may be set for a single day of the week, for multiple days of the week, or for every day of the week.
- Wait to finish setting.

AUXILIARY FEATURE

Upon ignition burner 1 is on and burner 2 is in the last setting.

Figure 94

ON:
To switch a burner on, press the ϟ button. ϟ displayed.

OFF:
To switch the burner off, press the ϟ button. ϟ disappears.

AUTOMATIC TURN DOWN

3 Hour No Communication Function

- The valve will turn to pilot flame if there is no communication between handset and receiver for a 3 hour period. The fire will continue to function normally when communication is restored.

Receiver Overheating
(only if module is connected)

- Valve turns to pilot flame if the temperature in the receiver is higher than 140 °F (60 °C). The main burner turns back on (manually or in Thermostatic Mode) only when the temperature is below 140 °F (60 °C).

AUTOMATIC SHUT OFF

Countdown Timer

- At end of countdown time period, the fire turns off. The Countdown Timer only works in Manual, Thermostatic, and Eco

Figure 108 ximum countdown time is 9 hours and 50 minutes

Low Battery Receiver

- With low battery power in the receiver the system shuts off the fire completely. This will not happen if the power supply is interrupted.

On-Demand Pilot

- This green feature eliminates gas energy consumption during extended appliance inactivity. When the appliance is inactive for an extended period of time the system automatically extinguishes the pilot. This feature helps the consumer realize cost benefits by automatically eliminating energy consumption during non-heating months and limited use.
- The programmed length of inactivity to activate the system is specified by the appliance manufacturer and cannot be altered in the field.

2nd Thermocouple Shut Off

- 2nd thermocouple Option: The system shuts off the fire if the main burner does not completely ignite approximately 20 seconds after ignition or after pushing ▲ button.

  NOTE: Before the next ignition there is a 2 minute waiting period. If the thermocouple is then still too hot, you will hear a long beep.

LED MODE

LED Mode can only be used for Club and Summum Series fireplaces. Press the button to turn on, dim, and turn off LED burner function. To change LED color (Club Series only) you must use the ProControl App.

OPERATING the FIREPLACE

OPERATING INSTRUCTIONS

GENERAL NOTES

NOTICE

Wiring of valve and receiver must be completed before starting ignition. Failure to do so could damage the electronics.

Handset
- Two (2) AAA batteries are supplied and required.
- Low battery indicator on handset display.

Receiver
- An AC adapter is supplied with the fireplace and should be used instead of batteries.
- NEVER use both batteries and an AC adapter.
- Batteries may be used for troubleshooting but should be removed in favor of the AC adapter when appropriate.

Software Version
Press ⏳ and ▲ buttons simultaneously. Software version is displayed.

Handset Model Number
Press ⏳ and ▼ buttons simultaneously. Handset model number is displayed.

Deactivate Functions
1. Install handset batteries. All icons are displayed and flashing.
2. While the icons are flashing, press the relevant function button and hold for 10 seconds.
3. The function icon will flash until deactivation is complete. Deactivation is complete when the function icon and two horizontal bars are displayed.

NOTE: If a deactivated button is pressed, there is no function, and two horizontal bars are displayed.

NOTE: Deactivation remains in effect after change of batteries.

Activate Functions
1. Install handset batteries. All icons are displayed and flashing.
2. To activate a function, press the relevant button and hold for 10 seconds.
3. The function icon will continue to flash until activation is complete. Activation is complete when the function icon is displayed.

The following Functions can be Deactivated/Activated
- CHILD PROOF (To activate press ⏻ and ▼ buttons simultaneously. displayed and the handset is rendered inoperable (except for off function).
- PROGRAM MODE
- THERMOSTATIC MODE (also deactivates Program Mode)
- ECO MODE
- MULTI-BURNER FEATURE
- COUNTDOWN TIMER

SETTING THE ELECTRONIC CODE

(First time use only.)

Radio Frequency Handset
To secure the communications between the handset and the receiver a security code must be chosen from among 65,000 codes available. Pairing the handset with the receiver automatically chooses one of these codes. To pair the handset and receiver:

- Press and hold the receiver's reset button until you hear two (2) beeps. The first beep is short and the second beep is long. After the second beep, release the reset button.
- Within the subsequent 20 seconds press the ▼ on the handset until you hear two additional short beeps confirming the code is set. If you hear one long beep, this indicates the pairing sequence has failed or the wiring is incorrect.

NOTE: This is a one time pairing only, and is not required after changing the batteries of the handset or receiver.

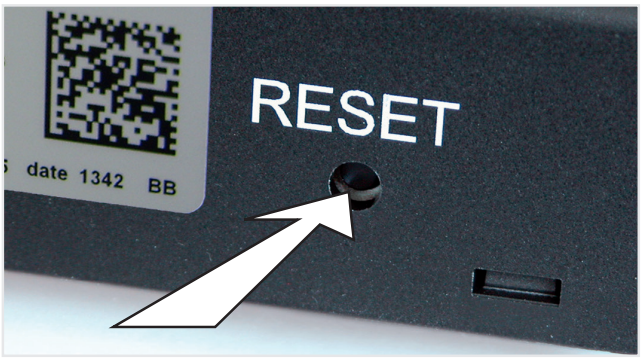

Receiver Reset Button
Figure 96

OPERATING the FIREPLACE

THE FIRST FIRE

When the fireplace is first heated, an odor may be given off by the hot metal. This is normal and is a result of the 'burn off' of the lubricants and sealants used when manufacturing the fireplace. We recommend that you open the nearby windows for extra ventilation and then operate the fireplace for at least four hours.

When the glass is cold, some condensation may appear on the glass after lighting the fireplace. This is normal and the condensation will disappear as the glass warms.

During this first fire, examine the flame for appearance and quality. Examine the burner media for sooting. The flame pattern should be similar to that show below (Figure 97). Flames may appear blue and will turn yellow after 15 to 20 minutes.

After this burn-off period, turn off the fireplace and let it cool *completely* to room temperature and clean both sides of the glass and the interior panels as described in the **MAINTENANCE** section.

Since it is a metal fireplace, the heat-up and cool-down cycles may produce some noises caused by the expansion and contraction of these metals. The premium materials and build quality of your fireplace will keep these sounds to a minimum.

Figure 97

To see an Element4 fireplace starting and running normally
please visit the link below.
WWW.EUROPEANHOME.COM/RESOURCES/VIDEOS/

MAINTENANCE

REMOVING AND CLEANING THE GLASS

OVERVIEW

The glass panels on this fireplace are held in place by a number of rope gaskets. These instructions will show you how to remove and install the rope gaskets and glass panels.

Please read these instructions completely before proceeding.

TOOLS REQUIRED

- Gloves (not included)

Remove the SIDE TRIM first, then the BOTTOM TRIM

Figure 98

Figure 99

REMOVING THE GLASS

Step 1.
Remove the lower and upright trim pieces which are held in place with magnets and will lift out.

Step 2.
The front glass panel should be removed first. This panel is secured with one lower rope gasket and one upper rope gasket.

Step 3.
Once the rope gaskets are out, lift the glass panel up and swing the lower edge of the glass panel out and over the standoff frame.

When the glass panel is clear of the standoff frame then lower the glass panel out and set the panel securely aside.

Step 4.
Remove all of the rope gaskets holding each remaining glass panel (if applicable). Remove each small glass panel and set aside.

PROPERLY PLACE ROPE GASKET(S) AND SEAL THE GLASS PANEL(S) BEFORE LIGHTING THE FIRE!

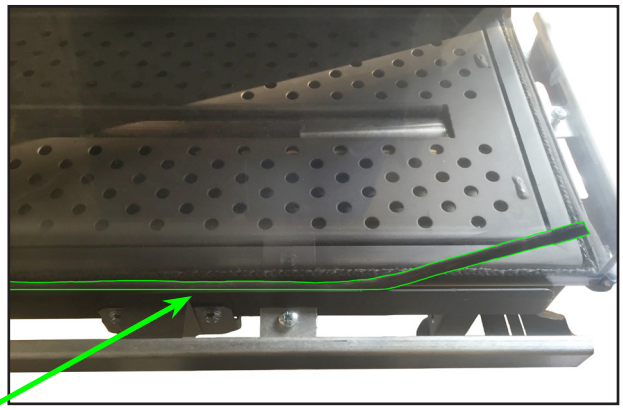

Figure 100

Remove the ROPE GASKET starting from one end down to the other end

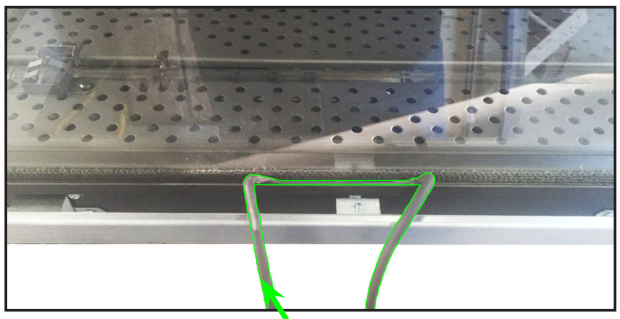

Figure 101

The ROPE GASKET will be removed for any remaining sides.

To see how to remove the glass from an Element4 fireplace please visit the link below.
WWW.EUROPEANHOME.COM/RESOURCES/VIDEOS/

MAINTENANCE

CLEANING THE GLASS

Burning natural gas (NG) or propane (LP) in this fireplace will always result in some of the gas components being deposited on the glass. Hydrogen sulfides and mercaptans, which are present in the burning gas, condense onto the relatively cooler glass surface and cause white film to build up over time.

The amount of this white film is influenced by a number of factors such as; the configuration of the system venting, thermal efficiency of the fireplace design, the humidity of combustion air, frequency of fireplace use, burner performance and, the fireplace design itself.

Do not use normal household (usually ammonia-based) glass cleaners to clean the glass as these cleaners can leave a permanent stain. Only a gas fireplace glass cleaner should be used. Products such as Stove Bright® Gas Appliance Glass Cleaner by Forrest Technical Coatings, Imperial Gas Fireplace Glass Cleaner by Imperial Manufacturing Group and GFC™ Gas Fireplace Glass Cleaner by A.W. Perkins Co. are designed for this purpose.

Follow the instructions for use and **do not clean the glass when it is hot**! If the glass becomes coated with deposits which cannot be removed it must be replaced.

The fireplace glass should be cleaned before the fireplace is first lit and then after the fireplace has been through its four hour burn-in cycle. This will reduce potential build up on your glass.

INSTALLING THE GLASS

The glass panels should be installed in reverse order of their removal.

Step 1.
Lift the glass panel up under the standoff frame and swing the lower edge of the glass panel against the firebox gasket. Set a rope gasket into place and secure it from the middle to the left and right sides.

Step 2.
Repeat Step 1 with the remaining glass panels.

Step 3.
Adjust the remaining glass panels left to right until there is no corner gap.

Step 4.
While ensuring that the glass panels are tight and square to each another, carefully install the remaining rope gaskets.

PROPERLY PLACE ROPE GASKET(S) AND SEAL THE GLASS PANEL(S) BEFORE LIGHTING THE FIRE!

MAINTENANCE

WARNING

Installation and maintenance must be performed by an authorized qualified installer, service agency or gas supplier.

TURN OFF THE GAS before servicing the appliance. It is recommended that a qualified service technician perform an appliance check-up/service once a year.

Any safety screen or guard removed for servicing MUST BE REPLACED before operating this appliance.

DO NOT USE this appliance if any part has been under water. Immediately call a qualified service technician to inspect the unit and to replace any part of the control system and any gas valve that has been under water.

Any alteration to the product that causes soot or carbon to form and results in damage is not the responsibility of the manufacturer.

Inspect the external vent cap on a regular basis to make sure that no debris, plants, trees, or shrubs are interfering with the air flow.

BURNER MAINTENANCE

The flames from the burner should be visually checked. The flame should have a blue base and yellow tops and be candle-like in appearance.

PILOT MAINTENANCE

The pilot flame must be visually checked. The pilot flame must always be present when the appliance is in operation and should appear as shown in Figure 91 (with hearth panel removed.)

The pilot has two distinct flames, one engulfing the thermocouple on its left, the other reaching across to the burner.

The area around the pilot should be inspected for cleanliness. Lint or foreign material must be removed with a brush or vacuum.

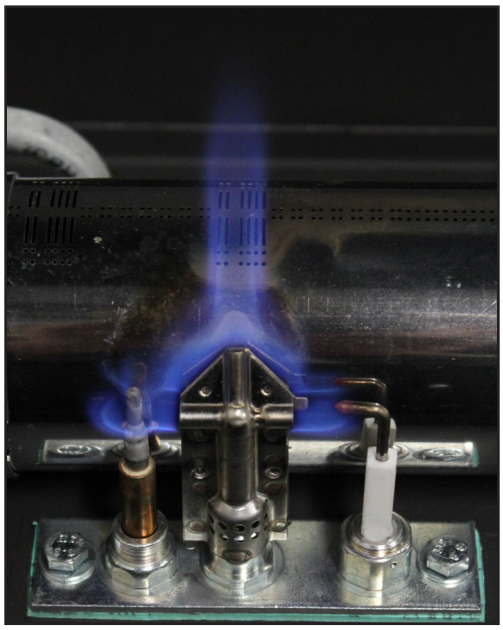

Figure 102

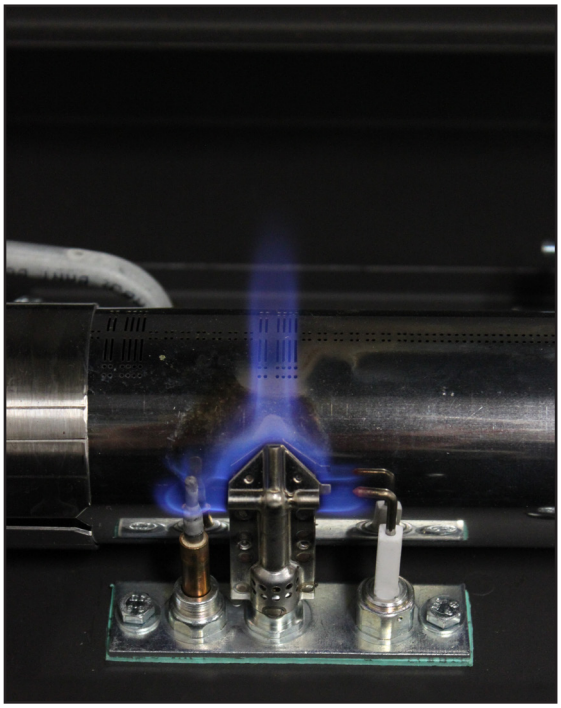

Figure 102

THERMOCOUPLE MAINTENANCE

The Element4 fireplaces have two thermocouples; one next to the pilot and one opposite the pilot side of the burner. The completeness and operation of both must be checked. A qualified installer must confirm that both thermocouples are in place and not damaged. While checking the thermocouple, please ensure that the ignitor rod is not cracked as well.

VENT MAINTENANCE

The following venting system inspection by a qualified service technician is recommended every six months:

1. Inspect for excessive condensation, e.g. water droplets forming in the inner lining and subsequently dripping out of the joints. This can cause corrosion in the system.
2. Check for corrosion in areas exposed to the elements. Where rust spots or holes have appeared, these must be immediately replaced.
3. Ensure that there is no foreign material in the vents. Survey by removing the cap and shining a light down the vent.
4. Check all joints and pipes to make sure that nothing has been disturbed or loosened.

REPLACEMENT PARTS

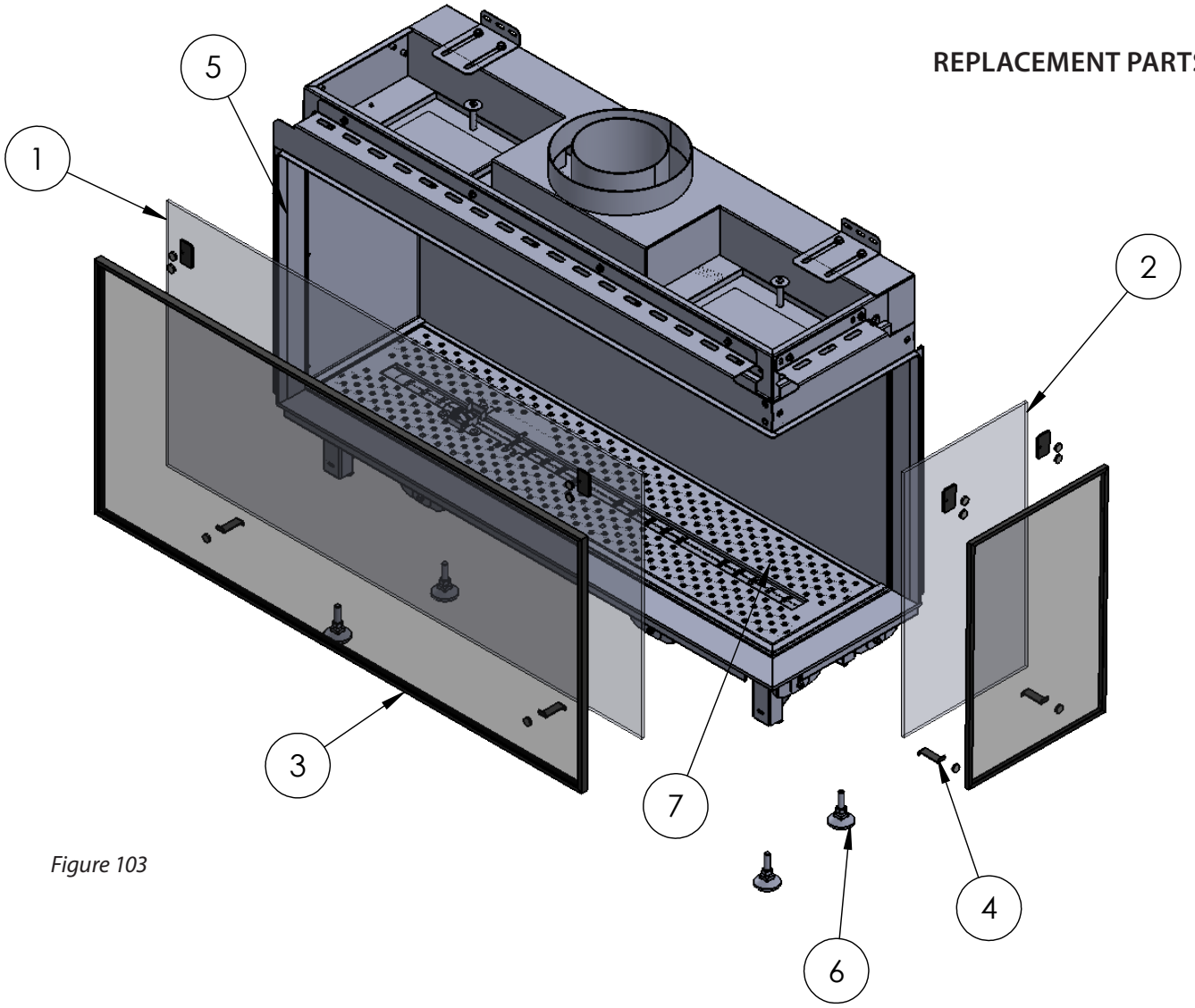

Figure 103

Bidore 95

Item	Description	Quantity (Required)	Part Number (Each)
1	Front Glass (Long)	1	E4-GLASS-95-FRONT/LUC2/3
2	Side Glass	1	E4-GLASS-140-95-SIDE
3	Safety Screen	1	E4-SS-BID1005R-MKII
4	All Tabs with Magnets (kit)	1	E4-SA-SS-HWK-4/12
5	Lower and Side Trim	1	Repl-E4-CP-TRIM-BID-95-MKII
6	Foot with nut	4	Repl-E4-CP-FT
7	Hearth Panel	1	Repl-E4-CP-HEARTH-95-MKII

Figure 104

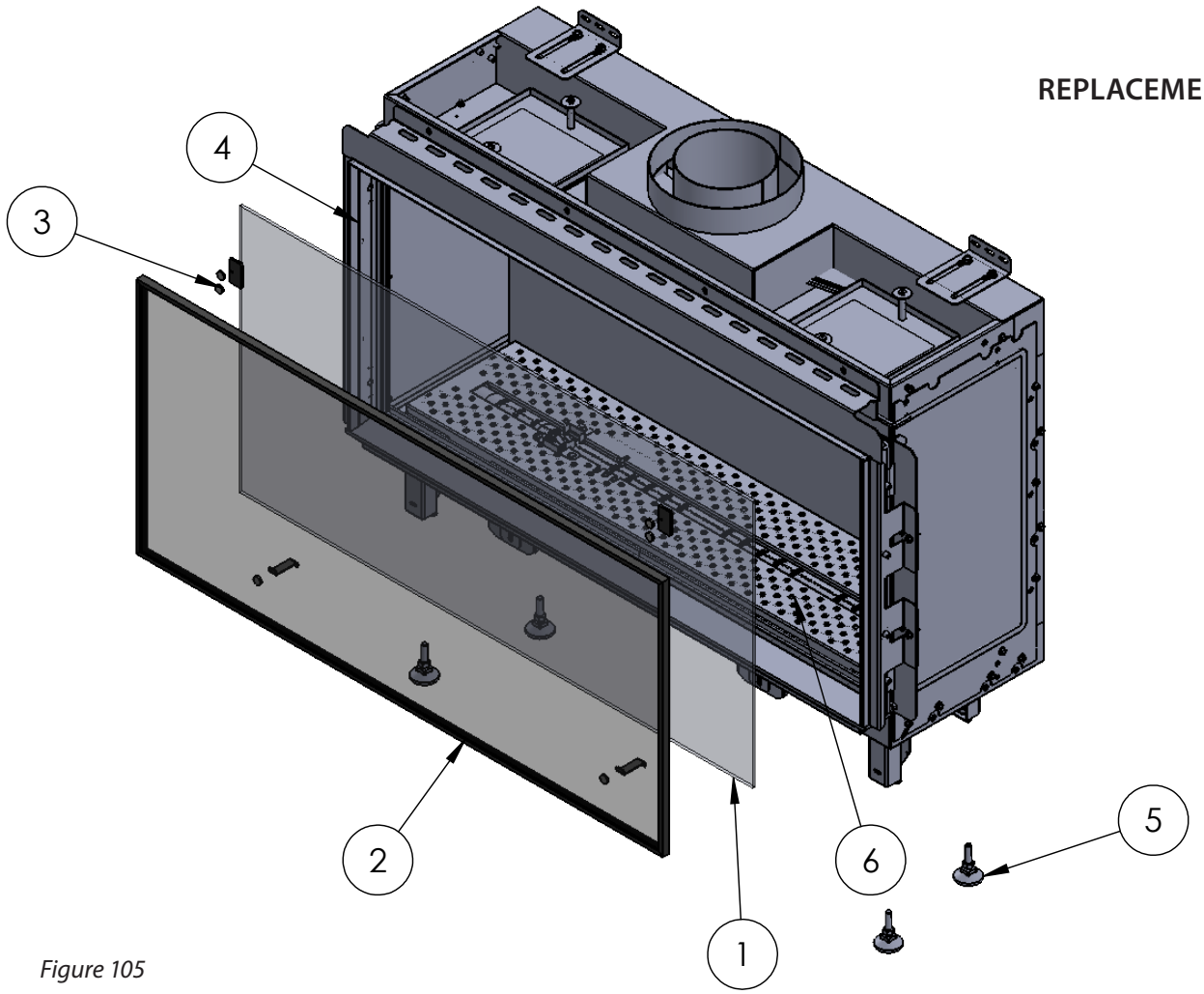

Figure 105

Modore 95

Item	Description	Quantity (Required)	Part Number (Each)
1	Glass	1	E4-GLASS-95-FRONT/LUC2/3
2	Safety Screen	1	E4-SS-MOD1005R-MKII
3	All Tabs with Magnets (Kit)	1	E4-SA-SS-HWK-3/9
4	Lower and Side Trim	1	Repl-E4-CP-TRIM-MOD-95-MKII
5	Foot with nut	4	Repl-E4-CP-FT
6	Hearth Panel	1	Repl-E4-CP-HEARTH-95-MKII

Figure 106

REPLACEMENT PARTS

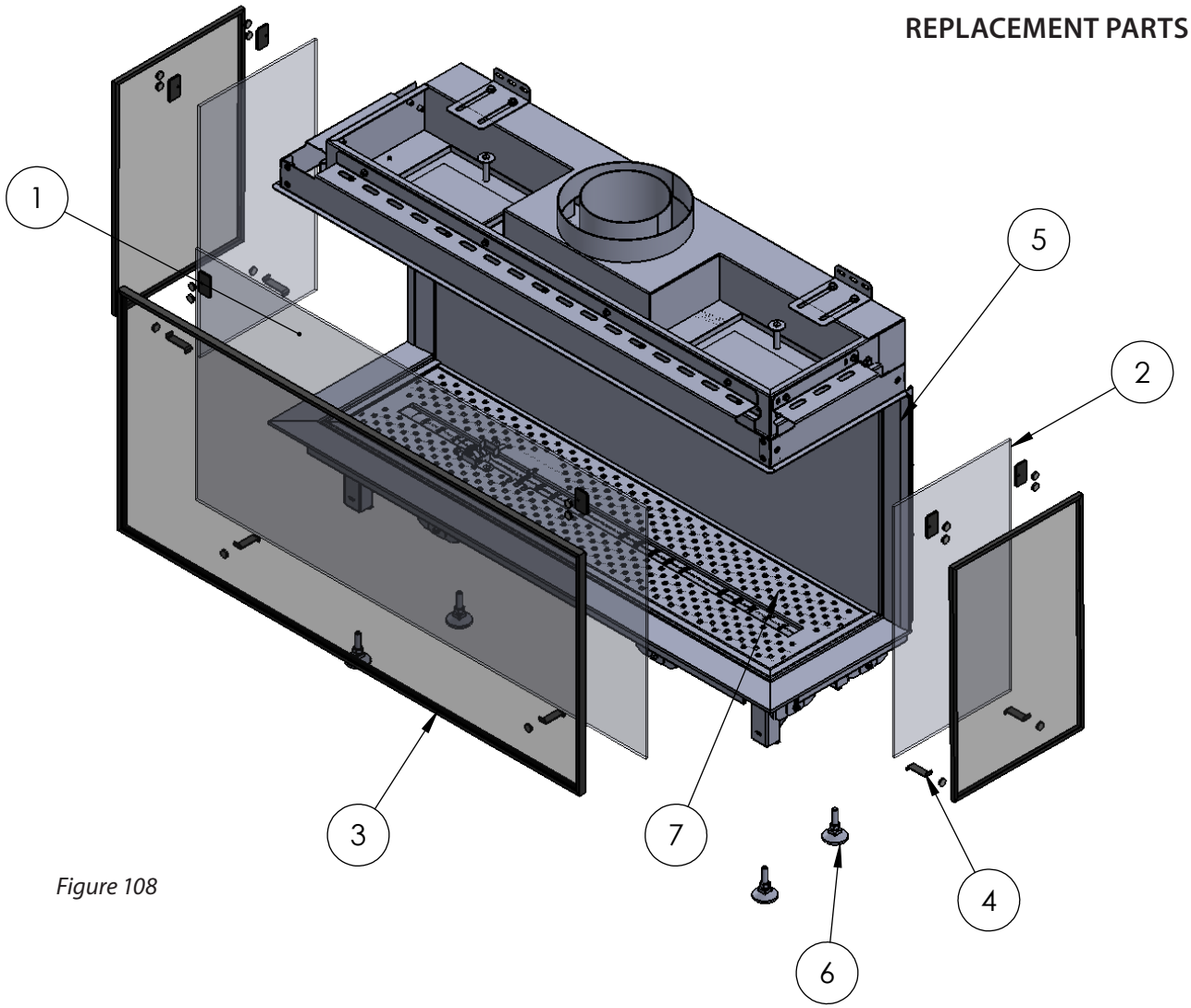

Figure 108

Trisore 95

Item	Description	Quantity (Required)	Part Number (Each)
1	Front Glass (Long)	1	E4-GLASS-95-FRONT/LUC2/3
2	Side Glass	2	E4-GLASS-140-95-SIDE
3	Safety Screen	1	E4-SS-TRI1005R-MKII
4	All Tabs with Magnets (kit)	1	E4-SA-SS-HWK-5/15
5	Lower and Side Trim	1	Repl-E4-CP-TRIM-TRI-95-MKII
6	Foot with nut	4	Repl-E4-CP-FT
7	Hearth Panel	1	Repl-E4-CP-HEARTH-95-MKII

Figure 109

REPLACEMENT PARTS

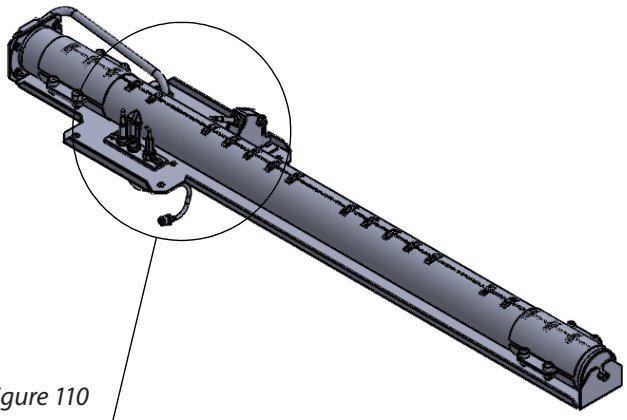

Figure 110

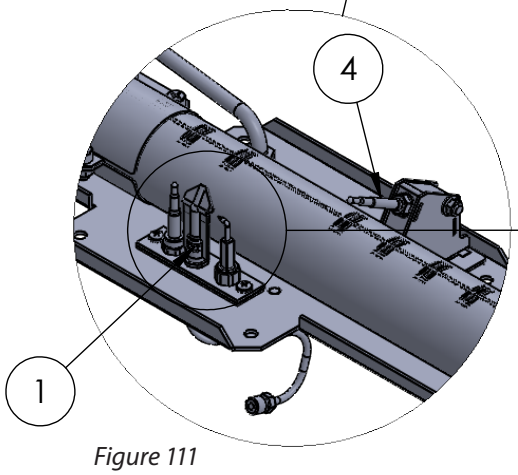

Figure 111

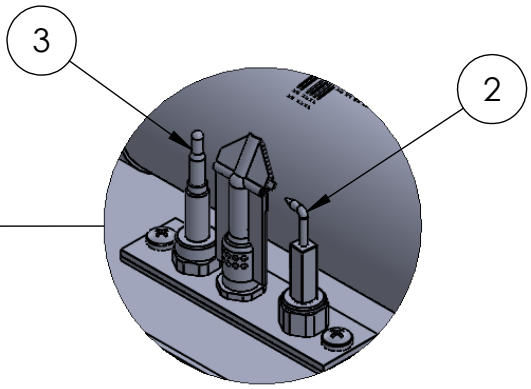

Figure 112

Item	Description	Quantity (Required)	Part Number (Each)
1	Pilot Assembly	1	Repl-E4-GS-PABT-01
2	Ignitor Rod	1	Repl-E4-GS-IGL-01
3	1st Thermocouople	1	Repl-E4-GS-1T-01
4	2nd Thermocouple (w/ mount)	1	Repl-E4-GS-2TC-mount-01

Figure 113

REPLACEMENT PARTS

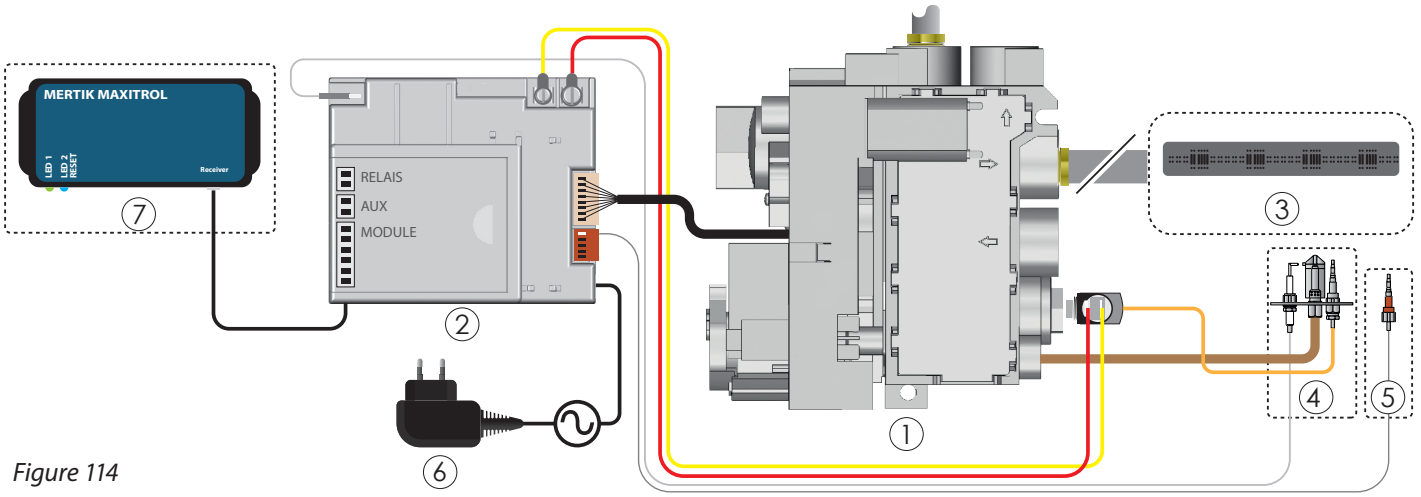

Figure 114

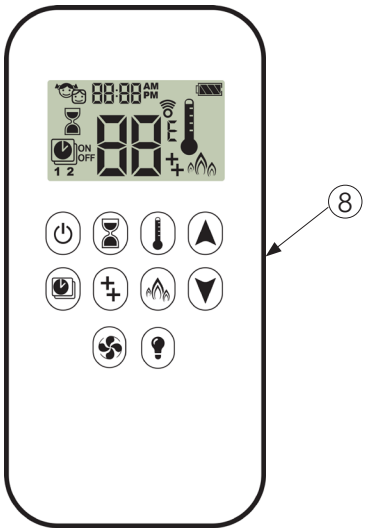

Figure 115

Item	Description	Quantity (Required)	Part Number (Each)
1	Gas valve	1	E4-GS-GV-01
2	Receiver (Control Module)	1	*Befor 1/2020* E4-GS-CM-Wifi-03 *After 1/2020* E4-GS-CM-Wifi-04
3	Main Burner		
4	Piolot Assembly	1	E4PGS-PABT-01
5	Second Thermocouple	1	E4-GS-2TC-01
6	6 Volt Adaptor	1	AC Adaptor-03
7	Wifi-Box (Optional)	1	E4-GS-Con-Wifi-01
8	10 Button Remote	1	Repl-E4-GS-RC-10B

Figure 116

WARRANTY

European Home Warranty
Element4 Gas Fireplace

European Home warrants these gas fireplaces against defects in materials and workmanship for a period of TWO (2) YEARS from the date of original retail purchase. Glass is expressly NOT covered by this warranty.

If a defect exists, European Home will, at its option, either (1) provide needed components using new or refurbished replacement parts or (2) exchange the product with one which is new or which has been manufactured from new or serviceable used parts and is at least functionally equivalent to the original product. A replacement product/part assumes the remaining warranty of the original product or ninety (90) days from the date of replacement or repair, whichever provides longer coverage for you. When a product or part is exchanged, any replacement item becomes your property and the replaced item becomes the property of European Home. All warranty claims must be submitted through the dealer from which you purchased the product. Check with your dealer in advance for any costs to you when arranging a warranty call. Shipping and/or delivery charges for parts are not covered by this warranty.

Nothing in the above shall be deemed to imply that this warranty shall apply to work which has been abused or neglected or shows evidence of changes or modifications by others with or without permit, damages caused by the acts of God, building settlement or moving, fire or vandalism. In addition, installation of this product that varies from the requirements stated in the instruction manual will void the warranty.

PRODUCT INSTALLATION RECORD

Installer: Please complete this form. Customer: Please retain this information.

Model (check one)	**Modore 95** ◯	**Bidore 95** ◯	**Trisore 95** ◯
Purchased From			
Date of Purchase			
Installed By			
Date of Installation			
Fireplace Serial Number			
Fuel Type			
Total Venting Horizontal			
Total Venting Vertical			

APPENDIX ONE

MASSACHUSETTS CERTIFICATION

This appliance is approved for installation in the Commonwealth of Massachusetts. The Board of State Examiners of Plumbers and Gas Fitters has issued approval number G3-0116-219 for this appliance.

The following must be observed when installing the Element4 fireplaces within the Commonwealth of Massachusetts:

(a) For all side wall horizontally vented gas fueled equipment installed in every dwelling, building or structure used in whole or in part for residential purposes, including those owned or operated by the Commonwealth and where the side wall exhaust vent termination is less than seven (7) feet above finished grade in the area of the venting, including but not limited to decks and porches, the following requirements shall be satisfied:

1. INSTALLATION OF CARBON MONOXIDE DETECTORS. At the time of installation of the side wall horizontal vented gas fueled equipment, the installing plumber or gasfitter shall observe that a hard wired carbon monoxide detector with an alarm and battery back-up is installed on the floor level where the gas equipment is to be installed. In addition, the installing plumber or gasfitter shall observe that a battery operated or hard wired carbon monoxide detector with an alarm is installed on each additional level of the dwelling, building or structure served by the side wall horizontal vented gas fueled equipment. It shall be the responsibility of the property owner to secure the services of qualified licensed professionals for the installation of hard wired carbon monoxide detectors

a. In the event that the side wall horizontally vented gas fueled equipment is installed in a crawl space or an attic, the hard wired carbon monoxide detector with alarm and battery back-up may be installed on the next adjacent floor level.

b. In the event that the requirements of this subdivision can not be met at the time of completion of installation, the owner shall have a period of thirty (30) days to comply with the above requirements; provided, however, that during said thirty (30) day period, a battery operated carbon monoxide detector with an alarm shall be installed.

2. APPROVED CARBON MONOXIDE DETECTORS. Each carbon monoxide detector as required in accordance with the above provisions shall comply with NFPA 720 and be ANSI/UL 2034 listed and IAS certified.

3. SIGNAGE. A metal or plastic identification plate shall be permanently mounted to the exterior of the building at a minimum height of eight (8) feet above grade directly in line with the exhaust vent terminal for the horizontally vented gas fueled heating appliance or equipment. The sign shall read, in print size no less than one-half (½) inch in size, "GAS VENT DIRECTLY BELOW. KEEP CLEAR OF ALL OBSTRUCTIONS".

4. INSPECTION. The state or local gas inspector of the side wall horizontally vented gas fueled equipment shall not approve the installation unless, upon inspection, the inspector observes carbon monoxide detectors and signage installed in accordance with the provisions of 248 CMR 5.08(2)(a)1 through 4.

(b) EXEMPTIONS: The following equipment is exempt from 248 CMR 5.08(2)(a)1 through 4:

1. The equipment listed in Chapter 10 entitled "Equipment Not Required To Be Vented" in the most current edition of NFPA 54 as adopted by the Board; and

2. Product Approved side wall horizontally vented gas fueled equipment installed in a room or structure separate from the dwelling, building or structure used in whole or in part for residential purposes.

(c) MANUFACTURER REQUIREMENTS - GAS EQUIPMENT VENTING SYSTEM PROVIDED. When the manufacturer of Product Approved side wall horizontally vented gas equipment provides a venting system design or venting system components with the equipment, the instructions provided by the manufacturer for installation of the equipment and the venting system shall include:

1. Detailed instructions for the installation of the venting system design or the venting system components; and

2. A complete parts list for the venting system design or venting system.

(d) MANUFACTURER REQUIREMENTS - GAS EQUIPMENT VENTING SYSTEM NOT PROVIDED. When the manufacturer of a Product Approved side wall horizontally vented gas fueled equipment does not provide the parts for venting the flue gases, but identifies "special venting systems", the following requirements shall be satisfied by the manufacturer:

1. The referenced "special venting system" instructions shall be included with the appliance or equipment installation instructions; and

2. The "special venting systems" shall be Product Approved by the Board, and the instructions for that system shall include a parts list and detailed installation instructions.

(e) A copy of all installation instructions for all Product Approved side wall horizontally vented gas fueled equipment, all venting instructions, all parts lists for venting instructions, and/or all venting design instructions shall remain with the appliance or equipment at the completion of the installation.

APPENDIX TWO

TROUBLESHOOTING FLOW CHART

FUNCTION		*POSSIBLE CAUSE*	*REMEDY*
A. Press the ON button to start ignition sequence. Beep will occur each second.	No →	Transmitter batteries low.	Replace transmitter batteries. Quality alkaline recommended.
		Receiver batteries low.	Test the batteries. replace if necessary. Quality 1.5V AA alkaline recommended. *Note: Do NOT connect an AC adapter when using receiver batteries.*
		Check that transmitter and receiver are synchronized.	Reset system, see the installation manual or the label on the receiver. One long beep indicates the wiring is incorrect or the code learning sequence has failed.
		Transmitter distance is limited.	Straighten the antenna.
			Replace the receiver.
		Defective AC adapter	Replace the AC adapter.
		Damaged wiring	Inspect/test all wiring and connections.
		2nd thermocouple is producing electricity.	Wait for 2nd thermocouple to cool down (3-5 minutes)

Yes ↓

B. Magnet unit is energized thus producing an obvious latching sound.	No →	No beep →	Impulse magnet not operating properly.	Replace gas valve.
	No →	3 short beeps →	Receiver batteries low.	Test the batteries, replace if necessary. Quality 1.5V AA alkaline recommended.
	No →	1 long beep →	8-wire cable is off or not operating properly.	Confirm proper operation of the 8-wire cable.
			SW-cable disconnected.	Confirm proper connection/operation of the SW-cable.
			Motor not operating properly.	Replace gas valve.
			Micro switch not operating properly.	Replace gas valve.
			2nd thermocouple not connected	Confirm integrity of 2nd thermocouple and connection.

Yes ↓

(continued)

APPENDIX TWO

FUNCTION		*POSSIBLE CAUSE*	*REMEDY*
C. Spark will occur each second.	No →	Ignition components not operating properly.	Check connection between ignition cable and ignitor rod.
			Check ignitor rod spark gap.
			Check ignitor rod.
			Check ignition cable for damage.
			Increase distance between ignition cable and all metal parts.
	No →	Ignition sequence stops after one spark	Remove ground bolt (T20 Torx) and clean ground lug.
	No →	Ignition sequence stops, no pilot flame. No reaction to remote control command.	Reset system, see the installation manual or the label on the receiver.
			Do not coil the ignition cable.
			Shorten the ignition cable, if possible.
	No →	Ignition sequence stops, no pilot flame. Transmitter command is possible.	Test the batteries, replace if necessary. Quality 1.5V AA alkaline recommended.
Yes ↓			
D. Pilot lit.	No →	TC- and SW-cable reversed.	Check cable connection between receiver and interrupter block.
Yes ↓		Magnet unit not operating properly.	Replace gas valve.
		Short between interrupter and SW cable.	Check interrupter block connection.
		No gas (magnet unit drops after 30 second audible count.)	Check gas supply.
		Spark not lighting the pilot.	Check spark is crossing pilot orifice.
		Cracked ignitor rod (spark heard but not seen)	Ensure that ignitor rod does not move within ceramic shield. Check that ceramic shield or ignition wire is not defective.
E. Sparking stops after pilot is lit.	No →	Short between interrupter block and TC-cable.	Check connection to interrupter block.
		Electronic measuring amplifier defective.	Replace the receiver.
Yes ↓			
(continued)			

APPENDIX TWO

FUNCTION		*POSSIBLE CAUSE*	*REMEDY*
F. Motor turns to main gas and pilot stays lit.	No → Magnet unit drops (audible sound)	Resistance in thermocouple circuit too high.	Check thermocouple circuit.
		Not enough heat on thermocouple.	Check position of pilot to thermocouple. Check the stability and intensity of pilot flame. Ensure the proper restrictor is installed. Ensure that the pilot flame is properly adjusted. Possible cold start. Wait one minute and retry.
		Low voltage from thermocouple.	Replace thermocouple. Do not over tighten - hand tight plus ¼ turn *maximum*.
		No gas (magnet unit drops after 30 second audible count.)	Check gas supply.
	No →	Broken receiver	Ensure powered/unpowered receiver allows manual operation.
	No →	Ignition sequence stops. No reaction to remote control command.	Reset system, see the installation manual or the label on the receiver.
			Do not coil the ignition cable.
		"140" models *ONLY:* Pilot flame under hearth panel not establishing.	Remove glass and hearth panel then check for proper pilot operation. If pilot establishes with panel off then install panel and glass and adjust pilot flame (hi/lo) for best operation.
Yes ↓			
G. Main burner is lit.	No →	Manual knob is in the "MAN" position.	Turn the control knob to "ON" position, a positive latch is required.
		Pilot flame is too low.	Confirm correct gas pressure. Increase pilot flame if necessary.
Yes ↓			

(continued)

APPENDIX TWO

FUNCTION			*POSSIBLE CAUSE*	*REMEDY*
H. Main burner stays lit.	No →	System 'drops out' - all flames immediately go out →	Too much draft at pilot flame (poor flame impingement of primary thermocouple.)	Check venting installation. Use restrictor as required.
			Pilot assembly out of order.	Inspect pilot assembly for correct operation and thermocouple impingement.
			5 day shut off.	The system shuts off the fire and pilot if there is no change in the flame height for 5 days.
	No →	Main burner remains lit while flames are lowered. (Main valve knob is turned via motor.) →	2nd thermocouple is not heated.	Ensure 2nd thermocouple is heated by a robust flame. The fireplace media may be interfering with proper flame. Check 2nd thermocouple wiring.
				Add 2nd ground wire from 2nd thermocouple to the grounding screw (trox) located on gas valve if not already attached.
			2nd thermocouple shut off.	The system shuts off the fire when the main burner flame is not sensed within 29 seconds of ignition or not sensed after pressing the *large flame* button. ***Note:*** If the system fails to light due to the 2nd thermocouple voltage not being sensed a two minute lockout period begins. This lockout time allows the gas to dissipate.
	No →	System goes to pilot flame only. →	6 hours of no motor movement.	In Manual/Temperature/Timer modes the valve turns down to pilot only if the flame height does not change for a 6 hour period. In Temperature/Timer modes if the ambient room temperature changes, the flame height will adjust automatically to maintain the set temperature and the fire will continue to function normally. The valve will turn to pilot flame if the set temperature and the ambient temperature remain the same over a 6 hour period.
Yes ↓				
I. Magnet unit drops while motor turns. Receiver makes 3 beeps.	Yes →		Receiver batteries low.	Test the batteries, replace if necessary. Quality 1.5V AA alkaline recommended.
			Ensure magnet unit is operating normally.	Test the receiver output to the magnet unit.
No ↓ (continued)				

APPENDIX TWO

FUNCTION		*POSSIBLE CAUSE*	*REMEDY*
J. Flames become thin, blue, wispy then go out.	Yes→	Exhaust is contaminating the fresh air.	Inspect venting for damage and/or incorrect installation.
		Flow of fresh air and/or exhaust is blocked.	Ensure that vent configuration is within the vent chart requirements.
			Check termination for blockage and/or appropriate type.
		LP gas being used with NG orifice(s).	Ensure the gas type is correct for the installed orifices.
No ↓			
K. Flames are very yellow with dark, sooty tips.	Yes→	The air shutter is closed when using LP gas.	When using LP gas the air shutter must be fully open. See conversion instructions.
		Flow of fresh air and/or exhaust is blocked.	Ensure that vent configuration is within the vent chart requirements.
			Check termination for blockage and/or appropriate type.
No ↓			
L. Flames are very busy and blowing in an abnormal direction.	Yes→	Air leak in the firebox.	Check unit for leaks at glass corners or at gaskets.
			Check unit for positive relief door seal.
			Check venting for complete integrity.
No ↓			
M. Flames are stable but too small and blue.	Yes→	Too much primary air.	Reduce the primary air opening until flames have blue base and yellow upper two-thirds.
No ↓			
NORMAL OPERATION			

APPENDIX THREE

CONNECTING TO A SMART HOME SYSTEM (Smart Home System Cable)

General Notes

The fireplace may be operated through an external source such as a smart home (home automation) system by using the 5-pin connector on the receiver.

A required 39" (990 mm) cable, with connector, is available (p/n E4-SA-SHSC-02). The overall cable length should not exceed 26' (7925 mm.)

Signal relays (gold contacts) or opto-couplers are recommended but not supplied. The E4-SA-SHSC-02 cable must be connected to the three smart home system contacts as shown below.

WARNING

You MUST ensure that the fireplace is in a safe and ready condition before attempting to operate it from a remote location.

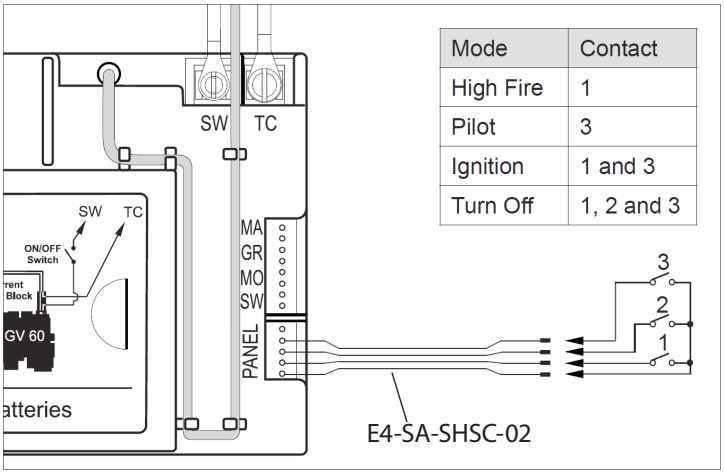

Mode	Contact
High Fire	1
Pilot	3
Ignition	1 and 3
Turn Off	1, 2 and 3

Figure 117

Sequence of Operation

- To start ignition, close contacts 1 and 3 simultaneously for 1 second.
- To set the valve to High Fire, close contact 1.
  To set the valve to Pilot, close contact 3. In each case, the contacts need to be closed for 12 seconds to turn the motor from one end-stop to the other end stop.
- To set the valve to the Off position, close contacts 1, 2, and 3 simultaneously for 1 second.

Modes of Operation

- Mode 1 - the external source provides "ON" and "OFF" operation only. The remote control provides all other functions.
  Note: Even if the fire is switched on by the external source, the remote control, in the thermostatic mode, controls the room temperature. The room temperature setting of the remote control will remain the same for the next ON-cycle of the external source as long as the temperature setting of the remote control has not been changed. If the remote control is in manual mode, it will go to High Fire in the next cycle of external operation.

- Mode 2 - The remote control must be set to the manual mode if the external source is to control the room temperature. If the handset is placed in the thermostatic mode it will override the external source.

Note:
Frequent ON and OFF cycles will limit life expectancy of the valve and will increase battery consumption. The fireplace should be powered by the AC adapter for improved reliability and customer satisfaction.

APPENDIX FOUR

INSTALLING THE OPTIONAL BLACK GLASS

Carefully remove the front glass according to the **Removing and Cleaning the Glass** section.

Figure 118

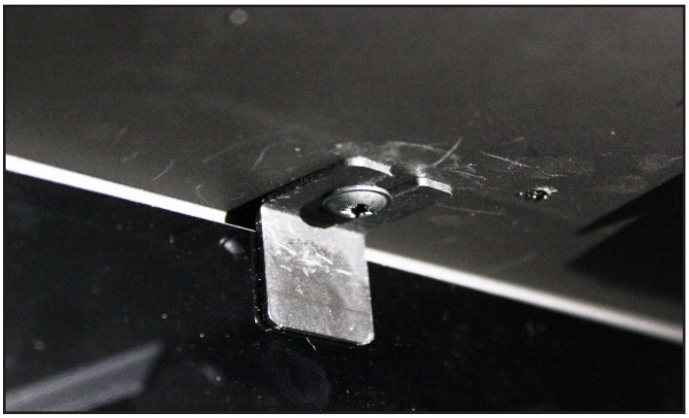

Figure 119

Using the provided suction cups, carefully insert the long black glass first. Angle the top and right side in first to clear the walls and pilot assembly of the fireplace. Partially unscrew the top mounting screws and slide on the black tab making sure the flat face is against the black glass. Tighten the screws to hold the tab and black glass in place.

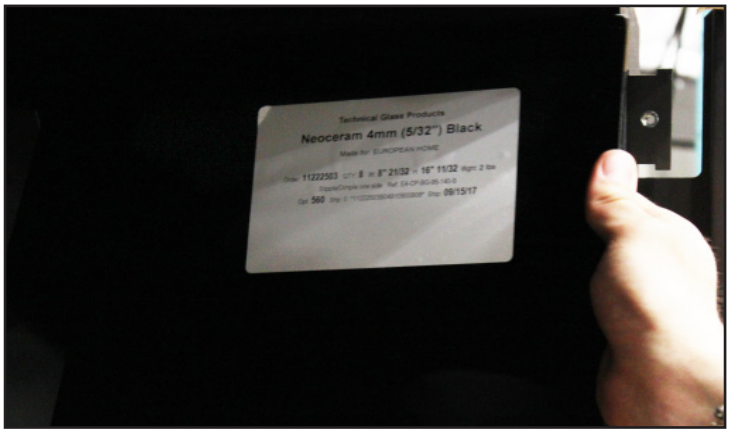

Figure 120

**** PLEASE NOTE ****
Do not press the bracket tight against the glass. You should be able to slide a dime (1⁄16") between the bracket and the glass.

Insert the short black glass using the same procedure as the long black glass. The short glass edge should overlap the long glass edge. (This step is for Modore and Bidore Models only)

Figure 121

APPENDIX FIVE

Errors codes Procontrol App

Error code	Message in App	Description	Possible cause
F02	Contact service	5 sec beep from the receiver. No response from receiver, and no inflammation.	• No engine end stop • Wiring motor • Microswitch • Knob B
F03	Contact service	5 seconds beep from the receiver. Ignition process is interrupted No response from receiver, and no ignition.	Thermocouple wiring not in order / interrupted
F04	Ignition failure. wait 1 minute, than try again.	No pilot flame within 30 sec. After 3rd attempts F06	• No gas • Air in the pipe • No spark
F06	Contact service	3rd time start attempt within 5 minutes	• No gas • Air in the pipe • No spark
F10	Contact service	Pilot is on 2nd thermocouple procedure Starting again after 2 min	• 2nd thermocouple is not heated • 2nd thermocouple blocked by fire media.
F12	Contact service	Motor turns to pilot light position	• Receiver above 60 ° C / 140 ° F
F13	Contact service	Motor turns to pilot light position	• Receiver above 80 ° C / 176 ° F
F14	Contact service	5 sec. beep No reaction from the fireplace and no ignition	• Wiring not in order • 2nd thermocouple interrupted • No right recipient
F15	Contact service	5 sec. beep No reaction from the fireplace and no ignition	• 2nd thermocouple not connected • Wiring 2nd thermocouple
F16	Hand transmitter out of reach	No temperature in the app	• Hand remote control out of reach for more than 1.5 hours. • Electrical fault
F17	Contact service	No ignition No reaction from the fireplace	• Voltage above 7.5 volts • AC adapter defective
F19	Contact service	Pilot flame goes out when the main burner is opened	• 1st Thermocouple voltage not sufficient • 1st thermocouple defective • Too low pressure • Resistance in the thermocouple circuit • Gas control block (magnetic coil)
F26	Contact service	No high flame regulation possible	• Receiver above 60 ° / 140 ° F
F28	On-Demand pilot	Pilot flame goes out	• Pilot flame goes out after there has been no motor movement for 7 days.
F31	Contact service	No reaction from the fireplace No control possible by the electronics	• Receiver defective
F41	Controleer Wi-Fi	No reaction from the fireplace	• No Wi-Fi connection
F43	No receiver connected. Contact service	No reaction from the fireplace No control possible by the electronics	• No communication between receiver and Wi-Fi module
F44	Contact service	No temperature display in the App “N.a.” in the App	• No remote control connected • Batteries in remote control empty

APPENDIX FIVE

Error code	App Message	Time	Description	Possible Cause
F04	F04	4 sec.	5 seconds beep from the receiver. No response from receiver, and no ignition.	No engine end stop Wiring motor Microswitch Knob B
F06	F06	4 sec.	3rd time a start attempt within 5 minutes	No gas Air in the pipe No spark
F09	F09	4 sec.	No reaction from the fireplace. No electronic control	Retry startup
F40	Battery symbol Contact service	Continu	Battery voltage in the hand transmitter too low	Replace batteries 2x 1.5 V AAA
F46	F46	4 sec.	No reaction from the fireplace Interrupted responses No electronic control	No or bad connection between the receiver and remote control No voltage on the receiver Low communication range, AC adapter

APPENDIX FIVE

Faults and error codes in the remote

This appendix can be consulted when error messages occur in the application for smartphone and tablet.

F41 error
This message will appear if there is no or bad Wi-Fi reception, this can be between app and router or Wi-Fi box and router

App
By closing the App and opening it again, this is solved in most cases.

Cause
The cause may be that the ProControl module is blocked or is too far away from the router.
See: router information.

Possible solution
Only place an external router for the ProControl module
Strengthen existing Wi-Fi signal
Resetting the router.

Router information

Minimum requirement
- Compatible with IEEE 802.11n / g / b
- WPA2 encryption
- Radio frequency 2.4 GHz band
- Wireless automatic channel: Automated search for WLAN radio channel that is free from interference.
- Support for the User Datagram Protocol (UDP)

Wi-Fi Router
It is important to think carefully about the location of a router. This device spreads the wifi signal in and around your home. Therefore, preferably choose a central position. You prevent long distances from occurring. Many people put the router in the meter cupboard, because that is where the internet comes in at many households. A bad choice! For a powerful WiFi signal, the router needs as much space as possible. Therefore, do not place the device near a wall or on the ground. Some routers have multiple antennas that you can target. Try to spread these antennas so that you increase the range.

Jammers
Many devices also emit radio waves just like your router. These include microwave ovens, wireless doorbells, baby monitors, Bluetooth adapters, wireless music systems, DECT telephones and security cameras. These devices can disrupt your wireless network (interference), so the Wi-Fi connection is not optimal. Try to keep jammers as far away as possible from the router. Neighboring wireless networks also play a role in the Wi-Fi area.

Figure 122: Application screen

2.4 or 5 GHz band?
By default, most routers use the 2.4 GHz band to broadcast the Wi-Fi signal. The disadvantage is that this frequency band is very busy, so that there is quickly interference. There are a lot of competing users and jammers using the same radio waves.
Since most "older" laptops, smartphones, tablets and other devices can not connect via the 5GHz band, the ProControl module is not suitable for 5GHz band.

NOTES

Imported and distributed in North America by:

EUROPEAN HOME
a division of Europa Ja, Inc.
30 Log Bridge Road
Building 300 - Suite 303
Middleton, MA 01949
www.europeanhome.com