BATHYSCAFOCUS

Scale 1 : 20
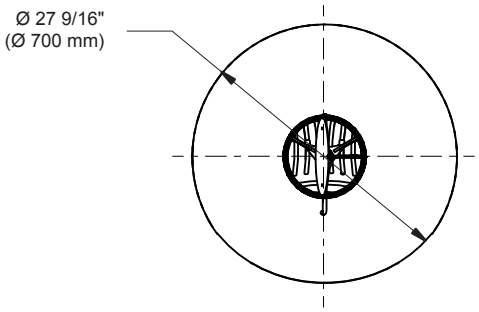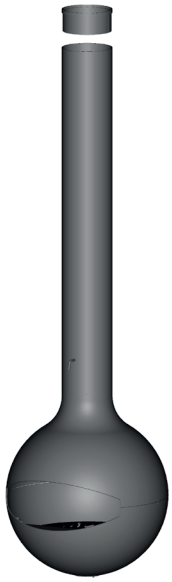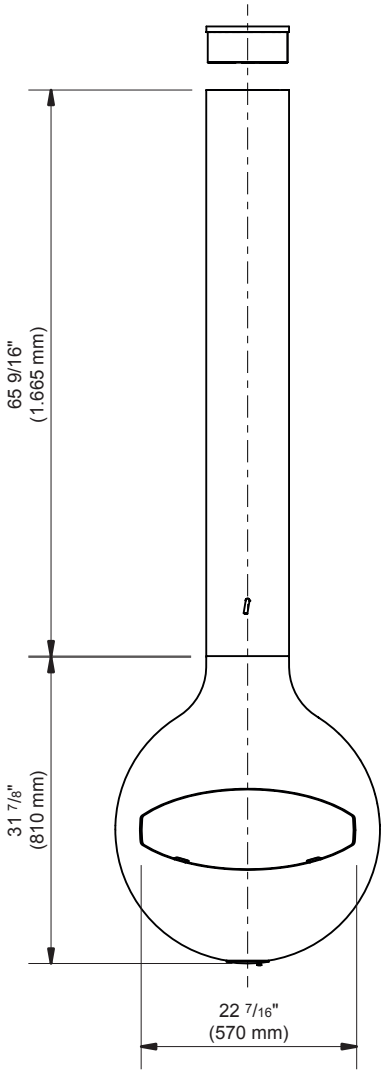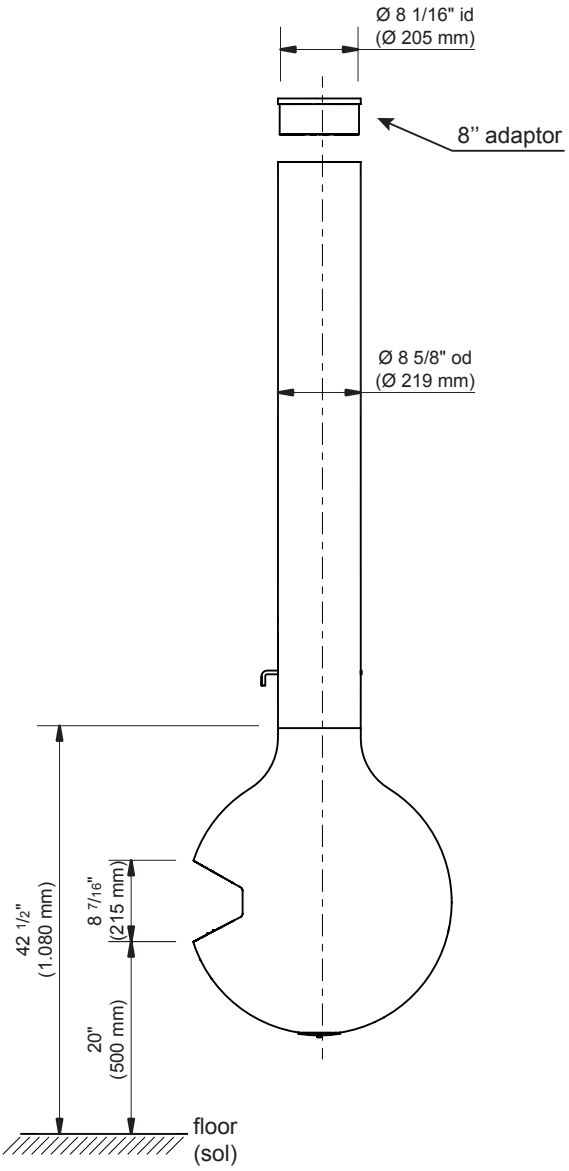
Note : imperial are rounded from metric